// **Retail Price List**

ALTA
WINDOW FASHIONS
design simplified

ECLIPSE
SHUTTERS

Pricing effective April 17, 2023 and supersedes all previous pricing.
Subject to change by Alta Window Fashions.

SUMMARY OF REVISIONS

CONTENTS

G FRENCH DOOR SHUTTERS

H STANDARD AND OPEN BY-PASS TRACK SYSTEM

I TRIPLE BY-PASS TRACK SYSTEM

J BI-FOLD TRACK SYSTEM

K TRACK SYSTEM VALANCES

L SPECIALTY SHAPES

M DECORATIVE SILL COVER

N INSTALLATION

O GENERAL INFORMATION & TROUBLESHOOTING

Pricing: Eclipse Shutter by Custom Brands Group are priced by the square foot.

Pricing : Eclipse Shutters by are priced by the square foot.

Frame Mount / Style	Size To Order	Pricing Formula
Outside Mount		
L Frames, Casing Frame, S Frame , Sill Frames	Window Opening + Overlap	Window Opening + Overlap
Inside Mount		
L Frames, Mounting Strips, No Frame	Window Opening	Window Opening
Inside Mount– Z Frame		
Bullnose, Trim, Deluxe Trim, Z-Frame	Window Opening	Ordered Size + Z Frame Overlap

Calculate Square Feet to determine base price

A. Roundup height & width to nearest inch.

Ex: 34 1/4 x 38 1/2 will be priced at 35' x 39"

Multiple rounded height and width to get square inches

B. Divide total square inched by 144 to get total SQ FT.

C. Multiply SQ FT by price per square foot.

D Note: There is a minimum charge of 6 sq ft per opening

Example: Ordered Size: 36 1/8" x 59 1/2" at $15 /

A. Round Up to 37" x 60"

Multiple 37" x 60" = 2220 square inches.

B. 2,220 ÷ 144 = 15.42 square feet

C. 15.42 square feet > 6 square feet

D. 15.42 x $15.00 = $231.30

$231.30 will be the base price (plus applicable sur-charges).

Outside Mount Frame Overlaps			
L-Frame	1-3/8"	S Frame	2"
Casing Frame	2-11/16"	S Sill Frame	1-3/8"
Casing Sill Frame	1-3/8"		
Overlap amount is added to each side with frame. **Use this size on your order form.**			

Inside Mount Z Frame Overlaps	
Bullnose Z	1- 1/4"
Trim Frame	1- 3/16"
Deluxe Trim Frame	2- 1/16"
Z Frame	1/2"
Overlap amount is added to each side with frame for **tip to tip pricing calculation ONLY.** DO NOT ORDER WITH OVERLAP MEASURE-MENTS.	

Calculate Square Footage with Overlap for a 48" x 60" Opening (20 sq ft.). Example uses a Bullnose Z Frame

Opening Width	48"x 60"	Opening Height	60"
Left Frame Overlap	1– 1/4"	Top Frame Overlap	1– 1/4"
Right Frame Overlap	1– 1/4"	Bottom Frame Overlap	1 - 1/4"
Total Width	**50 - 1/2"**	**Total Width**	**62-1/2"**

For shutters with this overlap, the measurement for pricing is 50 1/2" x 62 1/2", then rounded to 51" x 63" (21.60 sq ft).

See the following page for options and surcharges

Shipping: Please see General Information for freight and shipping charge information

Pricing: Eclipse Shutter by Custom Brands Group are priced by the square foot.

Pricing : Eclipse Shutter Surcharges

Add surcharges that may apply:	
Rear Tit / Clearview	add 10% to base price
Gear / Gear System	add 15% to base price
Casing Frame	add $1 (per square ft.)
Bi-Fold	add $22.50 (per linear ft.)
Closed Louver By-Pass with or without stackback	add $22.50 (per linear ft.)
Open Louver By-Pass with or without stackback	add $41.50 (per linear ft.)
Triple By-Pass Track System with or without stackback	add $41.50 (per linear ft.)
5" Deluxe Valance	add $8 (per linear ft.)
By-Pass or Bi-Fold Track – 1 extension	add $30 (per window) NET
By-Pass or Bi-Fold Track – 2 or 3 extensions	add $50 (per window) NET
Double Hung	add $40 (per window) NET
Café Style	add $30 (per window) NET
Build Out	add $30 (per window) NET
1/4", 1/2", 3/4", 1" mounting strip	add $10 (per side)
L Frame Cover Strips	add $10 (per 16' roll) NET
French Door Cut Outs	add $150 (per cut out) NET
Specialty Shapes	add $10 (per linear inch) width or height which ever is largest
Stainless steel hinges	add $5 (per panel)
Bay or bow	add $85 (per bay or bow window)
Cut Out (frame only)	add $8 (per cut out)

Above surcharges should be added to the base price when option is ordered with each shutter. These are not the extra lineal material pricing.

Deco Sill Cover Surcharge - NET

WIDTH TO:	18"	24"	30"	36"	42"	48"	54"	60"	66"	72"	78"	84"	90"	96"	102"	108"	114"	120"
Deco Sill Cover	$12	16	20	24	28	32	36	40	44	48	52	56	60	64	68	72	76	80

Effective
4/17/23

About the GREENGUARD® Environmental Institute
The GREENGUARD Environmental Institute (GEI) is an industry-independent, non-profit organization that oversees the GREENGUARD Certification Program. As an ANSI Authorized Standards Developer, GEI establishes acceptable indoor air standards for indoor products, environments, and buildings. GEI's mission is to improve public health and quality of life through programs that improve indoor air. A GEI Advisory Board consisting of independent volunteers, who are renowned experts in the areas of indoor air quality, public and environmental health, building design and construction, and public policy, provides guidance and leadership to GEI.

About GREENGUARD® Certification
Product certification program for low emitting interior building materials, furnishings, and finish systems. All GREENGUARD Certified Products have been tested for their chemical emissions performance and can be found in the GREENGUARD Online Product Guide.

About GREENGUARD® Gold (for Children & Schools Certification)
A product certification program for low-emitting interior building materials, furnishings, and finish systems used in educational, office and other sensitive environments. All GREENGUARD Gold products have been tested for their chemical emissions performance according to CA 01350 and can be found in the GREENGUARD Online Product Guide.

GREENGUARD Gold program's minimum requirements comply with the State of California's Department of Health Services Standard Practice (CA Section 01350) for testing chemical emissions from building products used in schools, offices and other sensitive environments. As such, GREENGUARD Gold products can be used as a strategy to earn valuable credits in the CHPS Best Practices Manual for K-12 schools, U.S. Green Building Council's LEED® Green Building Rating System, Green Guide for Healthcare™, NAHB Green Building Guidelines, Green Globes, Regreen and numerous other local green building codes.

Children are more heavily exposed to environmental toxins than adults; as a result their exposure levels are the basis for sensitive environments. They consume more food, water, and have higher inhalation rates per pound of body weight than adults. To account for inhalation exposure to young children with greater sensitivities, a body burden correction factor of 0.43 has been applied to current allowable emission levels from indoor materials and furnishings.

Emission controls are established to define low-emitting materials for environments where people spend extended periods of time and have children and sensitive adults in residence. These may include schools, daycares, healthcare facilities and residential and commercial spaces.

See the following page for the Greenguard Certificates for Polyresin Shutters. For more information about Greenguard, please visit their website at www.greenguard.org.

Polyresin Shutters and GREENGUARD®
Polyresin Shutters has been tested and vertified for both GREENGUARD Indoor Air Quality and GREENGUARD Gold. In addition, GREENGUARD has listed Polyresin Shutters on their website as being resistant to the growth of mold. For more information about GREENGUARD, please visit their website at www.greenguard.org.

CERTIFICATE
OF COMPLIANCE

GREENGUARD
PRODUCT CERTIFIED FOR LOW CHEMICAL EMISSIONS
UL.COM/GG
UL 2818
GOLD

Eclipse Shutters

Eclipse Shutters

4366-420
Certificate Number

16 Nov 2007 - 16 Nov 2023
Certificate Period

Certified
Status

UL 2818 - 2013 Gold Standard for Chemical Emissions for Building Materials, Finishes and Furnishings

Window treatments are determined compliant in accordance with California Department of Public Health (CDPH) Standard Method V1.2-2017 using an Office and Classroom Environment.

Product tested in accordance with UL 2821 test method to show compliance to emission limits on UL 2818. Section 7.1 and 7.2.

CERTIFICATE
OF COMPLIANCE

GREENGUARD
PRODUCT CERTIFIED FOR LOW CHEMICAL EMISSIONS
UL.COM/GG
UL 2818
GOLD

Eclipse Shutters

Eclipse Shutters with UltraSatin Finish

43247-420
Certificate Number

15 Mar 2022 - 16 Nov 2023
Certificate Period

Certified
Status

UL 2818 - 2013 Gold Standard for Chemical Emissions for Building Materials, Finishes and Furnishings

Window treatments are determined compliant in accordance with California Department of Public Health (CDPH) Standard Method V1.2-2017 using an Office and Classroom Environment.

Product tested in accordance with UL 2821 test method to show compliance to emission limits on UL 2818. Section 7.1 and 7.2.

UL investigated representative samples of the identified Product(s) to the identified Standard(s) or other requirements in accordance with the agreements and any applicable program service terms in place between UL and the Certificate Holder (collectively "Agreement"). The Certificate Holder is authorized to use the UL Mark for the identified Product(s) manufactured at the production site(s) covered by the UL Test Report, in accordance with the terms of the Agreement. This Certificate is valid for the identified dates unless there is non-compliance with the Agreement.

limited lifetime warranty

Congratulations On Your Selection

Because we take pride in our workmanship and quality that goes into every one of our products, we back our products with this:

Limited Lifetime Warranty Covering Our Custom Made Window Coverings

Warranty on Shutter Frame and Shutter Panel

Shutters are warranted against such defects in material that might result in blistering, peeling, flaking, corroding, and fading of the shutter frame or panels.

This Warranty on the Polyresin3® frame and Polyresin3® panels shall remain in effect only if normal cleaning practices are followed periodically (see section "Maintenance and Cleaning").

General Conditions

1. Product Use

This Warranty applies only in respect to products used strictly for the purpose for which they were intended.

2. Warranty Limitations

CBG liability is limited solely and exclusively to repair or replacement, at the option of CBG and under no circumstances will CBG be liable for incidental or consequential charges such as, but not limited to, labor costs for any purpose, inconvenience, damage or injury to persons or to property, or any other expense. Warranty applies to the original purchaser only and is not transferrable.

3. Replacement Parts or Repairs

CBG reserves the right to discontinue or change any CBG shutter as currently manufactured. If an exact replacement part is not available, CBG reserves the right to substitute parts of equal quality at its sole option.

Exclusions from Warranty Coverage

The following are excluded from coverage under this Warranty:

a. Exposure to air pollutants and normal atmospheric conditions may cause all Polyresin3® surfaces to gradually suffer an accumulation of surface dirt or stains. These are normal occurrences and are not covered under the CBG Warranty.
b. Any defect, malfunction, or failure to perform which has occurred because of unreasonable use, improper application, or failure to perform reasonable or necessary maintenance.
c. Any damage to the shutters or components of the shutters caused by settlement or structural defects of the building in which they are installed.
d. Any damage caused by wind, hail, lightning, or other acts of God, intentional acts, accidents, negligence, or exposure to harmful chemicals or pollutants.
e. Damage caused by improper handling or installation.
f. Any shutter which has been repaired or modified or attempted to have been repaired or modified by any person other than a duly authorized representative of CBG.
g. Shutters are light controlling but not black out.
h. Shutters made without divider rails, too wide, too high, or over the maximum square footage are not warranted.

Maintenance and Cleaning

Polyresin3® materials are closer to "maintenance free" than any other building material.

However, surfaces may become dirty. Normal maintenance requires washing with mild soap and water using a soft cloth. For difficult to remove dirt and stains, water-based household cleaners can be used. Chlorine-based cleaners or other cleaners containing organic solvents could affect the surface appearance and durability of the product.

Procedure and Conditions of Warranty Remedy

Repairs are done at the CBG plant. Shutters must be brought to CBG. CBG will not be responsible for any costs incurred in transporting shutters to and from the CBG plant.

In the event that the CBG obligation under this Warranty is sought, the Owner must notify the Dealer/ Distributor in writing within thirty (30) days after the defect has first appeared. Such notification must contain the following:

a. Name and address of the Owner.
b. Date of installation.
c. A brief description of the defect.

CBG Custom Brands Group

12800 Center Court Dr. S., Suite 100
Cerritos, CA 90703

ALTA
WINDOW FASHIONS

Fax: 866-291-2016
email: cbgshutters@custombrandsgroup.com

Account Name		Acct #	Date
Phone #	Fax #		Page of
PO	Tag Name		
Dealer Contact Name			
Dealer Contact Email			

* Line	* Room Location	* Control System	* Split Option	* Control System Style	* Colors	Hinge Type	Hinge Colors	* Louver Size	* Mount Type	* Frame Type	Width Ordered to 1/16"	Height Ordered to 1/16"	Panel Configuration / Panel Lock Standard	P1 Interlock	Shutter Application	Frame Sides	Frame Sill Sides	Frame Build Out L or C	* Divider Rail #1	* Divider Rail #2	* Divider Rail Type
		G CV TC TOF	Distance Up Inches to Center of Split	Standard Cafe DH FD Cut FD Direct Mount/ No Frame	**C** 5136 **P** 5151 **V** 5140	Standard (S) Extension (Ext)	P SS B	2½ 3½ 4½	IM OM IF	L CSF T DT Z BZ S CS SB ST	Max. Single Panel 36" Max. Bi-Fold Panel 24"	Max. Panel Height 120"	L – Left R – Right LL – Left Bi-Fold RR – Right Bi-Fold T – T-Post	Standard (S) No (N)	Window **(W)** Door **(D)**	1, 2, 3, 4 Indicate Sides Required	Y, N Indiate Sides Required	1 = ½ 2 = 1 3 = 1½ 4 = 2	Distance Up required over 66"	Distance Up required over 96"	Standard **(S)** Deluxe **(D)**
											Inside Mount = Smallest Opening Size Outside Mount = Largest Frame Size										

***All columns with asterisk must be filled in for check measure service to be processed.**

Notes:

Uneven Panel Widths OR Uneven T-Post Distances

Line #	Panel 1/ 1st T-Post	Panel 2/ 2nd T-Post	Panel 3/ 3rd T-Post	Panel 4/ 4th T-Post

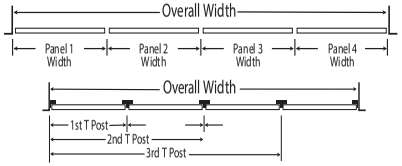

Frame Cut-Outs (All Cut Outs Are 7 Inches)

Line #	Side L, R, T, B	Type B	Starting Point for 7" cut-out Start and end point if under 7"

Café Style

Line #	Panel Height	Filler Y or N	Filler Top or Bottom

Double Hung Application

Line #	Split Distance from Bottom (Inches)

French Door Cutout

Line #	Side L or R	Distance Up

Order Acknowledgment

Items that do not meet product specifications, as detailed in IMPORTANT INFORMATION and in the manual, will be **MANUFACTURED WITH A VOID WARRANTY.**

Customer Agreement

I agree with the product ordered as reviewed on this form.

Signature:

Standard Order Form

* Line	* Room Location	* Control System	* Split Option	* Colors	Hinge Color	Ext. Hinge	* Louver Size	* Mount Type	Width Ordered to 1/16"	Height Ordered to 1/16"	Panel Configuration	P1 Interlock	Shutter Application	Frame			* Divider Rail #1	* Divider Rail #2	* Divider Rail Type
											Panel Lock Standard			Sides	Sill	L or C Ext.			
		T CV G	Distance Up Inches to Center Split	5136 5140 5151	P S B	Y N	2-1/2" 3-1/2" 4-1/2"	IM OM IF	Max single panel 36" Max bi-fold panel 24" Inside Mount = Smallest Opening Size Outside Mount =Largest Frame Size	Max. Panel 120"	L - Left R - Right LL - Left Bi-Bold RR - Right B-Fold T - T-Post	Y N	French Door (FD) Window (W) Door (D)	1,2,3,4 Shade Sides Required	Y, N Shade Sides Required	1 = 1/2 2 = 1 3 = 1-1/2 4 = 2	Distance up required over 66"	Distance Up required over 96"	Standard (S) Deluxe (D)

Line	Indicate line number start from #1 for ease of referring to a confirmation or sales quotation
Room - Location	Indicate the room name keeping under 12 characters to allow for full name to show on the product labels · Indicate each room different for ease of sorting - (example Bed 1 Left, Bed 1 Center, Bed 1 Right)
Operating System	G = Gear (Internal Gear System) CV = Rear Tilt (a louver connector attaching to the side of louvers on the back of the panel to the hinge side) TC = Tilt Bar Front Center(a function bar used to tilt louvers with option for Center Front) TOF = Tilt Bar Front Offset Hinge Side(a function bar used to tilt louvers with option for Offset Front)
Split Option	Indicate the distance up from bottom of measurements to the center of the desired split location or specify louver count on top & bottom · Split may not be exact as requested. It will vary based on louver size · Split can be requested on any of the three operating systems at time of production · Splits should not be modified at installation as additional tension may be required
Colors	· White / Cotton 5136 · Almond / Vanilla 5140 · Ivory / Pearl 5151
Hinge Color	P = Painted S = Stainless Steel B = Brass
Ext. Hinge	Only Available with unframed shutters Y = Extension Hinges 1-1/4" N = Regular Hinge 5/8"
Louver Size	2 ½" 3 ½" 4 ½"
Mount Type	IM - Inside Mount - Factory takes deductions IM Installation holes are predrilled · IM deductions with no frame = 1/4 on total height plus appropriate width deduction based on number of panels · IM deductions with standard frame = 1/16" for any sill or L frame side and 1/8" for any non-sill side · IM deductions with a standard frame with flex = 1/16" for any sill and 3/8" for any non-sill side
	IF - Inside Finished – no deductions will be made by production
	OM - Outside Mount - Factory takes no deductions - OM Installation holes are predrilled
Frame Type	L = IM or OM C = OM Casing T = IM Trim DT = IM Deluxe Trim Z = IM Z B = IM Bullnose Z Hole punches for corner keys will only be available for IM frames - All OM application will be provided with glue
Width	Ordered to the 1/16"
Height	Ordered to the 1/16"
	4" top and bottom rail are standard for all heights unless otherwise indicated 2" top and bottom rail are optional under 36" in height and must be requested in notes indicating line numbers
Panel Configuration	Specify where to place the hinges and the configuration starting from the left side of the opening L= Left R = Right, T = T-Post LL = Left Bi-fold RR = Right Bi-fold Panel lock is standard - If magnets & plates are to be requested instead of panel lock then indicate in " Notes" on the order form For non-track doors - IE P4D patio doors, panel lock is standard but magnets will also be included.
P1 Interlock	Interlock is optional for a P1 application - Y = Interlock requested N = Interlock not requested · Interlock is standard on all other applications other than a P1 Single panel
Shutter Application	FD = French Door - two sided cover strips and extra top and bottom L Frame extensions are provide · FD = French Door - if a cut out is required then indicate in the French Door Section W = Window - a standard application other than a track system (Bay / Bow , Specialty Shapes, French Door or Door) D = Door - a standard 5/8" deduction is made at the bottom of the panel instead of a standard 1/8" · D = Door - a deduction that differs from standard can be requested by indicating in the notes section
Frame Sides	Indicate numerically the number of frame sides (including any Sill) and shade in the sides required
Frame Sill Sides	Indicate numerically the number of Sill frame sides and shade in the sill sides required
L/ C Extension	If required - Indicate the number of L Frame or Casing Frame Extensions (maximum of 4)
Divider Rail	A divider rail is required for support with a varied number of rules · A divider rail is required for other application for heights over 66", a second rail for over 96" · When a divider rail is required the minimum distance between any rail is 20"
Divider Rail Type	S = Standard D = Deluxe with built in pull handle
Uneven Panel Widths	Provide the panels sizes required including any frames starting from the left side of the opening
Uneven T Post Distances	Provide the T Post distances including any frames starting from the left side of the opening. · If T Post location is not specified, T Posts will be evenly spaced.
Frame Cut outs	All cutouts are 7" - If the cut out required is over 7", the full height or full width of the frame must be cut out · Removing the frames light block & frame back · Side frame cutouts are measured from the bottom IM sill or OM frame to the starting point of the cut out · Top or Bottom cut-outs are measured from the left IM Sill or OM frame to the starting point of the cut out · Surcharges are applicable
Cafe Style	For applications where panel height is shorter than the full 4 sided frame Surcharges are applicable
Double Hung	Double hung split distance is measured from the bottom IM sill or OM frame to the center of the horizontal T post (Horizontal T Post is standard and recommended) · If vertical T Posts are also required then indicate the locations in the uneven T post distance section on the order form
French Door Cut-out	Available with 4 sided L Frame only L = Left Side R = Right Side (surcharge is applicable) · Distance up - from the bottom of the L frame location to the center of the cut out
Order Acknowledgement	Items that do not meet product specification as detailed in the manual, will be manufactured with a void warranty

Standard Order Form

* Line	* Room Location	* Control System	* Split Option	* Colors	Hinge Color	Ext. Hinge	* Louver Size	* Mount Type	Width Ordered to 1/16"	Height Ordered to 1/16"	Panel Configuration / Panel Lock Standard	P1 Interlock	Shutter Application	Frame: Sides	Frame: Sill	Frame: L or C Ext.	* Divider Rail #1	* Divider Rail #2	* Divider Rail Type
		T CV G	Distance Up Inches to Center Split	5136 5140 5151	P S B	Y N	2-1/2" 3-1/2" 4-1/2"	IM OM IF	Max single panel 36" Max bi-fold panel 24" Inside Mount = Smallest Opening Size Outside Mount =Largest Frame Size	Max. Panel 120"	L - Left R - Right LL - Left Bi-Bold RR - Right B-Fold T - T-Post	Y N	French Door (FD) Window (W) Door (D)	1,2,3,4 Shade Sides Required	Y, N Shade Sides Required	1 = 1/2 2 = 1 3 = 1-1/2 4 = 2	Distance up required over 66"	Distance Up required over 96"	Standard (S) Deluxe (D)

Uneven Panel Widths OR Uneven T-Post Distances

Line #	Panel 1/ 1st T-Post	Panel 2/ 2nd T-Post	Panel 3/ 3rd T-Post	Panel 4/ 4th T-Post

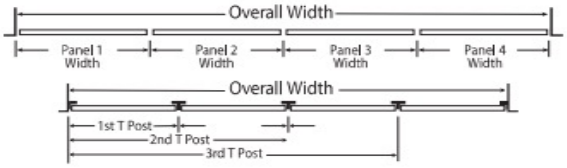

Frame Cut-Outs (All Cut Outs Are 7 Inches)

Line #	Side L, R, T, B	Starting Point for 7" cut-out Start and end point if under 7"

Café Style

Line #	Panel Height	Filler Y or N	Filler Top or Bottom

Double Hung Application

Line #	Split Distance from Bottom (Inches)

French Door Cutout

Line #	Side L or R	Distance Up

ALTA
WINDOW FASHIONS

Fax: 866-291-2016
email: cbgshutters@custombrandsgroup.com

Account Name	Acct #	Date
Phone #	Fax #	Page of
PO	Tag Name	
Dealer Contact Name		
Dealer Contact Email		

* Line	* Room Location	Control System	* Split Option	* Control System Style	* Colors	Hinges (BiFold Only)	* Louver Size	Mount Type	* Width Ordered to 1/16"	Height Ordered to 1/16"	Panel Configuration	Frame Sides	Frame Buildout	* Divider Rail Type	* Divider Rail #1	* Divider Rail #2	Valance Valance Type	Valance Returns
		G TC TOF	Distance Up Inches to Centre	**BP** ByPass (Closed) **BO** ByPass (Open) **BT** ByPass (Triple) **BF** (BiFold)	**C** 5136 **P** 5151 **V** 5140	P SS B	2½ 3½ 4½	IM OM IF	Max. single panel 36" Max bi-fold panel 24"	Max. panel height 120"	LR 2 L 2 R 4 L 4 R 2L 2R etc.	1 2 3 4 Shade sides required	0 1 2	Standard **(S)** Deluxe **(D)**	Distance up in inches required over 66"	Distance up in inches required over 96"	**Bi-Fold 2-12"** **By-Pass 3-12"** **Crown 5"**	**OM = Standard Returns** **IM = Square Cut** **Only enter custom return below for OM applications. IM cannot have returns**
									Inside Mount = Smallest Opening Size **Outside Mount = Largest Frame Size**									

***All columns with asterisk must be filled in for check measure service to be processed.**

Notes:

Uneven Panel Widths (ByPass Only)

Line #	Panel 1	Panel 2	Panel 3	Panel 4	Panel 5	Panel 6

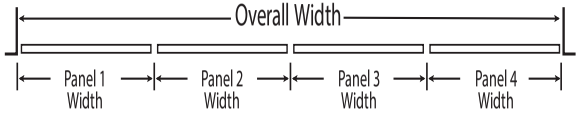

Frame Cut-Outs (All Cut Outs Are 7 Inches)

Line #	Side L, R, T, B	Type B	Starting Point

ORDERACKNOWLEDGEMENT

Items that do not meet product specifications, as detailed in IMPORTANT INFORMATION and in the manual, will be MANUFACTURED WITH A VOID WARRANTY.

Customer Agreement

I agree with the product ordered as reviewed on this form.

Signature:

Track System Order Form

* Line	* Room Location	* Control System	* Split Option	* Colors	Hinges B-Fold ONLY	* Louver Size	* Mount Type	* Frame Type	Width Ordered to 1/16"	Height Ordered to 1/16"	Panel Configuration	Frame Sides	Frame Ext.	Divider Rail			Valance		
														Type	#1	#2	Valance Type	Returns	Override
		G TC TOF	Distance Up Inches to Center Split	5136 5140 5151	P S B	2-1/2" 3-1/2" 4-1/2"	IM OM IF	BP ByPass (closed) BO ByPass (open) BT (Bypass) (Triple)	Max single panel 36" Max bi-fold panel 24" Min panel width 17" Inside Mount = Smallest Opening Size Outside Mount =Largest Frame Size	Max. Panel 120"	LR LCR LCCR	BYPASS 1 3 4	0 1 2	Standard (S) Deluxe (D)	Distance up required over 66"	Distance Up required over 96"	Standard (S) Crown (C)	OM OV Override	Indicate with Custom Returns

Line	Indicate line number start from #1 for ease of referring to a confirmation or sales quotation
Room	Indicate the room name keeping under 12 characters to allow for full name to show on the product labels · Indicate each room different for ease of sorting - (example Bed 1 Left, Bed 1 Center, Bed 1 Right)
Operating System	G = Gear (Internal Gear System) TC = Tilt Bar Front Center(a function bar used to tilt louvers with option for Center Front) TOF = Tilt Bar Front Offset Hinge Side(a function bar used to tilt louvers with option for Offset Front)
Split Option	Indicate the distance up from bottom of measurements to the center of the desired split location or specify louver count on top & bottom · Split may not be exact as requested. It will vary based on louver size · Split can be requested on any of the three operating systems at time of production · Splits should not be modified at installation as additional tension may be required
Colors	· White / Cotton 5136 · Almond / Vanilla 5140 · Ivory / Pearl 5151
Hinge Color	P = Painted S = Stainless Steel B= Brass
Louver Size	2 ½" 3 ½" 4 ½"
Mount Type	OM - Outside Mount - Factory takes no deductions - OM Installation holes are predrilled
	IM - Inside Mount - Factory takes 1/8" deductions on both width and height - IM Installation holes are predrilled · DirectConnect indicates terminology as "inside tight"
	IF – Inside Finished - Factory takes no deduction per frame side - IM Installation holes are predrilled
Frame Type	BP – By-Pass (CLOSED) BO – By-Pass (OPEN) BT – By Pass (Triple) BF – Bi-fold
Width	Ordered to the 1/16"
Height	Ordered to the 1/16"
	4" top and bottom rail are standard for all heights unless otherwise indicated 2" top and bottom rail are optional under 36" in height and must be requested in notes indicating line numbers
Panel Configuration	Indicate the Panel Configuration · For Bi-fold 2L= 2 panel Bi-Fold · For By-Pass 2L = 2 panels joined
Frame Side	Indicate numerically the number of frame sides (including any Sill) plus shade in the sides required
Ext	If required - Indicate the number of Frame Extensions
Divider Rail Type	S = Standard D = Deluxe with built in pull handle
Divider Rail	A divider rail is required for support with a varied number of rules · A divider rail is required for other application for heights over 66", a second rail for over 96" · When a divider rail is required the minimum distance between any rail is 20"
Valance Type	S – Standard 2 ½" (for Bi-fold) C – Crown 5" (for By-Pass)
Valance Returns	OM - Return Length (from front of frame to back of frame) BF = 3" BP = 5" BO & BT = 8 3/8" OV - Valance comes with returns with requested return length - can be for OM, IM or IF applications IM - There are no returns when IM is indicated - Valance is cut at ordered width less 1/8" - Order OV if returns required IF - There are no returns when IF is indicated - Valance is cut at ordered width - Order OV if returns required
Override	Must indicate the length of the valance return - measure from front of frame to distance back required Computer will account for the valnce corner miter as well as valance clip projection
Uneven Panel Widths	By-Pass only Provide the panels sizes required · If panels or joined panels are to be different sizes
Frame Cut outs Bi-Fold	All cutouts are 7" - If the cut out required is over 7", the full height or full width of the frame must be cut out · Removing the frames light block & frame back · Side frame cutouts are measured from the bottom IM sill or OM frame to the starting point of the cut out · Top or Bottom cut-outs are measured from the left IM Sill or OM frame to the starting point of the cut out · If the cut out required is over 7", the full height or full width of the frame must be cut out · Surcharges are applicable
Order Acknowledgement	Items that do not meet product specification as detailed in the manual, will be manufactured with a void warranty

Uneven Panel Widths (ByPass Only)						
Line #	Panel 1	Panel 2	Panel 3	Panel 4	Panel 5	Panel 6

By-Pass Track System Order Form

* Line	* Room Location	* Control System	* Split Option	* Colors	Hinges B-Fold ONLY	* Louver Size	* Mount Type	* Frame Type	Width Ordered to 1/16"	Height Ordered to 1/16"	Panel Configuration	Frame Sides	Frame Ext.	Divider Rail			Valance		
														Type	#1	#2	Valance Type	Returns	Override
		G TC TOF	Distance Up Inches to Center Split	5136 5140 5151	P S B	2-1/2" 3-1/2" 4-1/2"	IM OM IF	BP ByPass (closed) BO ByPass (open) BT (Bypass) (Triple)	Max single panel 36" Max bi-fold panel 24" Min panel width 17" Inside Mount = Smallest Opening Size Outside Mount =Largest Frame Size	Max. Panel 120"	LR LCR LCCR	BYPASS 1 3 4	0 1 2	Standard (S) Deluxe (D)	Distance up required over 66"	Distance Up required over 96"	Standard (S) Crown (C)	OM OV Override	Indicate with Custom Returns

Line	Indicate line number start from #1 for ease of referring to a confirmation or sales quotation
Room	Indicate the room name keeping under 12 characters to allow for full name to show on the product labels · Indicate each room different for ease of sorting - (example Bed 1 Left, Bed 1 Center, Bed 1 Right)
Operating System	G = Gear (Internal Gear System) TC = Tilt Bar Front Center(a function bar used to tilt louvers with option for Center Front) TOF = Tilt Bar Front Offset Hinge Side(a function bar used to tilt louvers with option for Offset Front)
Split Option	Indicate the distance up from bottom of measurements to the center of the desired split location or specify louver count on top & bottom · Split may not be exact as requested. It will vary based on louver size · Split can be requested on any of the three operating systems at time of production · Splits should not be modified at installation as additional tension may be required
Colors	· White / Cotton 5136 · Almond / Vanilla 5140 · Ivory / Pearl 5151
Hinge Color	P = Painted S = Stainless Steel B= Brass
Louver Size	2 ½" 3 ½" 4 ½"
Mount Type	OM - Outside Mount - Factory takes no deductions - OM Installation holes are predrilled
	IM - Inside Mount - Factory takes 1/8" deductions on both width and height - IM Installation holes are predrilled · DirectConnect indicates terminology as "inside tight"
	IF – Inside Finished - Factory takes no deduction per frame side - IM Installation holes are predrilled
Frame Type	BP – By-Pass (CLOSED) BO – By-Pass (OPEN) BT – By Pass (Triple) BF – Bi-fold
Width	Ordered to the 1/16"
Height	Ordered to the 1/16"
	4" top and bottom rail are standard for all heights unless otherwise indicated 2" top and bottom rail are optional under 36" in height and must be requested in notes indicating line numbers
Panel Configuration	Indicate the Panel Configuration · For Bi-fold 2L= 2 panel Bi-Fold · For By-Pass 2L = 2 panels joined
Frame Side	Indicate numerically the number of frame sides (including any Sill) plus shade in the sides required
Ext	If required - Indicate the number of Frame Extensions
Divider Rail Type	S = Standard D = Deluxe with built in pull handle
Divider Rail	A divider rail is required for support with a varied number of rules · A divider rail is required for other application for heights over 66", a second rail for over 96" · When a divider rail is required the minimum distance between any rail is 20"
Valance Type	S – Standard 2 ½" (for Bi-fold) C – Crown 5" (for By-Pass)
Valance Returns	OM - Return Length (from front of frame to back of frame) BF = 3" BP = 5" BO & BT = 8 3/8" OV - Valance comes with returns with requested return length - can be for OM, IM or IF applications IM - There are no returns when IM is indicated - Valance is cut at ordered width less 1/8" - Order OV if returns required IF - There are no returns when IF is indicated - Valance is cut at ordered width - Order OV if returns required
Override	Must indicate the length of the valance return - measure from front of frame to distance back required Computer will account for the valnce corner miter as well as valance clip projection
Uneven Panel Widths	By-Pass only Provide the panels sizes required · If panels or joined panels are to be different sizes
Frame Cut outs Bi-Fold	All cutouts are 7" - If the cut out required is over 7", the full height or full width of the frame must be cut out · Removing the frames light block & frame back · Side frame cutouts are measured from the bottom IM sill or OM frame to the starting point of the cut out · Top or Bottom cut-outs are measured from the left IM Sill or OM frame to the starting point of the cut out · If the cut out required is over 7", the full height or full width of the frame must be cut out · Surcharges are applicable
Order Acknowledgement	Items that do not meet product specification as detailed in the manual, will be manufactured with a void warranty

Uneven Panel Widths (ByPass Only)						
Line #	Panel 1	Panel 2	Panel 3	Panel 4	Panel 5	Panel 6

Specialty Shapes Order Form

ALTA
WINDOW FASHIONS

Fax: 866-291-2016
email: cbgshutters@custombrandsgroup.com

Mail templates to:
CBG C/O Hunter Douglas
C/O Templates
One Hunter Douglas Drive
Cumberland, MD 21502

Account Name	Acct #	Date
Phone #	Fax #	Page of
PO	Tag Name	
Dealer Contact Name		
Dealer Contact Email		

* Line	* Room Location	* Shape Type Shape # = Name	N° of Vertical Supports	* Control System	* Colors	* Hinges	* Louver Size	* Mount	Frame Type	Width Ordered to 1/16"	X	Height Ordered to 1/16"	Sill Frame Location	C or L Frame Extension
		Templates required indicated below:	0 1 2 3	RT TC TOF TCR	**C** 5136 **P** 5151 **V** 5140	P SS B	2 ½" 3 ½"	**IM** Inside **OM** Outside	L CSF T DT Z BZ S CS SB	Inside Mount = Smallest Opening Size Inside Mount Deduction is 1/8" for every frame Outside Mount = Largest Frame Size			None T B T,B T,B,L etc.	Y N Maximum 1 Extension
											X			

*** All columns with asterisk must be filled in for check measure service to be processed.**

Notes:

Template details
- ☐ Template attached
- ☐ Template data sent

Date: _____

Shape to line up with shutters below
- ☐ Both orders with same due date
- ☐ Line # of shutters below _____
- ☐ Line # of shape _____

Shape not lining up with shutters below
- ☐ Both orders with same due date
- ☐ Both orders with different due dates

(If on DC then order as 2 seperate orders)

Notes:

Round Top Shades (required templates indicated)

A1 Half Circle	**A2L Qtr. Circle Left** Template required if multi-radius	**A2R Qtr. Circle Right** Template required if multi-radius	**A4 Ext. Eyebrow** (Must have leg height)
A4 Ext. Eyebrow (Must have leg height)	**A5 Eyebrow** Template required	**A5 Eyebrow** Template required	**T5 Gothic** Template required

CHECK SPECIFICATIONS FOR MINIMUM AND MAXIMUM SIZES – REVERSE SIDE

Round Top Shape measurements from the left side (to center if rounded top)

2"	4"	6"	8"	10"	15"	20"	30"	40"	50"

Round Top Shape m easurements from the right side (to center if rounded top)

50"	40"	30"	20"	15"	10"	8"	6"	4"	2"

Shape measurements from the right side (to center if rounded top)

Leg Height

for A4 Ext. Eyebrow

Left Leg Height [ ] Right Leg Height [ ]

Vertical Support Distances from left side (center of support)

1st [ ] 2nd [ ] 3rd [ ]

Straight Sided Shapes

A7 Angle extended	**A7 Angle extended**	**A7 Angle extended**	**A7 Angle extended**
A7 Angle extended	**A8 Pentagon**	**T3 Hexagon** Template required	**T4 Octagon**

Straight Sided Shapes diagrams have numbered sides. Insert measurements in the order on the diagram.

1	2	3	4	5	6	7	8

Vertical Support Distances from left side (centre of support)

1st [ ] 2nd [ ] 3rd [ ]

ORDER ACKNOWLEDGMENT

Items that do not meet product specifications, as detailed in IMPORTANT INFORMATION and in the manual, will be MANUFACTURED WITH A VOID WARRANTY.

Customer Agreement

I agree with the product ordered as reviewed on this form.

Signature:

Specialty Shapes Order Form

* Line	* Room Location	* Shape Type	No. of Vertical supports	Operating System	* Tilt Bar Options	* Colors	Hinge Color	* Louver Size	* Mount Type	* Frame Type	Width Ordered to 1/16"	Height Ordered to 1/16"	Panel Configuration / Panel Lock Standard	Sill Frame Location	C or L Frame Ext.
		Templates required for: Imperfect Arch Elliptical Quarter Circle Gothic	0 1 2 3	RT TC TOF TCR	C-F C-R OF-F OF-R	5136 5140 5151	P S B	2-1/2" 3-1/2" 4-1/2"	IM OM	Deluxe Trim Z L Casing Bullnose S	Inside Mount = Smallest Opening Size Outside Mount =Largest Frame Size		L - Left R - Right LL - Left Bi-Bold RR - Right B-Fold T - T-Post	None T T,B T,B,L etc.	Y N Max 1 Extension

Line	Indicate line number start from #1 for ease of referring to a confirmation or sales quotation
Room	Indicate the room name keeping under 12 characters to allow for full name to show on the product labels · Indicate each room difference for ease of sorting - example Bed 1 Left, Bed 1 Center, Bed 1 Right
Shape Type	Indicate the name of the shape
Vertical supports	As indicated on the chart on the chart above
Operating System	CV = Rear Tilt (a louver connector attaching to the side of louvers on the back of the panel to the hinge side) TC = Tilt Bar Front Center(a function bar used to tilt louvers with option for Center Front) TOF = Tilt Bar Front Offset Hinge Side(a function bar used to tilt louvers with option for Offset Front) TCR = Tilt Bar Center Rear
Tilt Bar Options	·TC Tilt Bar Center Front ·TCR Tilt Bar Centre Rear ·TOF Tilt Bar Offset Front
Colors	· White / Cotton 5136 · Almond / Vanilla 5140 · Ivory / Pearl 5151
Hinge Color	P = Painted S = Stainless Steel B = Brass
Louver Size	2 ½" 3 ½" not available in 4 ½"
Mount Type	IM - Inside Mount - factory takes deductions - IM Installation holes are predrilled · IM deductions are 1/8" on each side · OM - Outside Mount - Factory takes no deductions - OM Installation holes are predrilled
Frame Type	L = IM or OM C = OM Casing T = IM Trim. DT = IM Deluxe Trim. Z = IM Z. B = IM Bullnose Z · Frames must be used for all specialty shapes
Width	Ordered to the 1/16" - IM = smallest opening size OM = Largest frame size
Height	Ordered to the 1/8" - IM = smallest opening size OM = Largest frame size *(it is recommended to consider the smaller louver sizes for the shorter the heights)* ·Depending on the shape, support blocks could account for one full louver height
Frame Sill	Indicate by letter or number the Sill frame sides (dependant if round top or straight side T = Top, B = Bottom, L = Left, R = Right, 1 = side 1, 2 = side 2 etc.
L/C Ext	If required - Indicate the number of L Frame or Casing Frame Extensions
Template Attached	Template required when indicated on above chart or front of order form. Templates to be made on Kraft or butcher paper ONLY. · Template information is to be printed on the front side (facing into the room) · Information includes - Width, Height, Dealer Name, Tag Name · Template measurements must match the measurements given on the order form
Line up	If the shape need to line up exactly with a shutter below then indicate sales order and Line #
Round Top Measurements	Left side is measured from left to centre without going past centre at increments requested Right side is measured from right to centre without going past centre at increments requested Straight edge ruler slide inside T post is recommended for measuring - ask your representative
Leg height	Required leg height for tunnel, eyebrow, and gothic
Vertical supports	Required - as per chart above · Measured from the left side to the middle of the support
Straight sides measurements	Indicate measurement as per numbers on the form
Order Acknowledgement	Items that do not meet product specification as detailed in the manual, will be manufactured with a void warranty.

ALTA
WINDOW FASHIONS

Fax: 866-291-2016
email: cbgshutters@custombrandsgroup.com

Account Name	Acct #	Date
Phone #	Fax #	Page of
PO	Tag Name	
Dealer Contact Name		
Dealer Contact Email		

* Line	* Room Location	* Control System	* Split Option	* Colors	Hinge Colors	* Louver Size	* Mount Type	* Frame Type	Width Ordered to 1/16"	Height Ordered to 1/16"	Panel Configuration	T Post Type	Frame Sides	Frame Sill Sides	Frame Build Out L or C	* Divider Rail #1	Divider Rail #2	* Divider Rail Type
		G CV TC TOF	Distance Up Inches to Centre	**C** 5136 **P** 5151 **V** 5140	P SS B	2½ 3½ 4½	IM OM IF	L CSF T DT Z BZ S CS SB ST	Max. single panel 36" Max bi-fold panel 24"	Max. panel height 120"	LTLTRTR LTLTRTRTR LTLTLTRRTR etc.	Large **(L)** Small **(LF)**	1, 2, 3, 4 Shade Sides Required	Y, N Shade Sides Required	1 = ½ 2 = 1 3 = 1½ 4 = 2	Distance Up required over 66"	Distance Up required over 96"	Standard **(S)** Deluxe **(D)**
									Inside Mount = Smallest Opening Size **Outside Mount = Largest Frame Size** **Back of Frame with Extensions**									

Specifics for dealer/installer reference only

	Width A	Angle	Width B	Angle	Width C
Top Width Measurements					
Bottom Width Measurements					
	Left Frame Height	T Post 1 Height		T Post 2 Height	Right Frame Height
Height Measurement					

***All columns with asterisk must be filled in for check measure service to be processed.**

Notes

For compound mitred 3 or 4 sided frames only.

Diagram

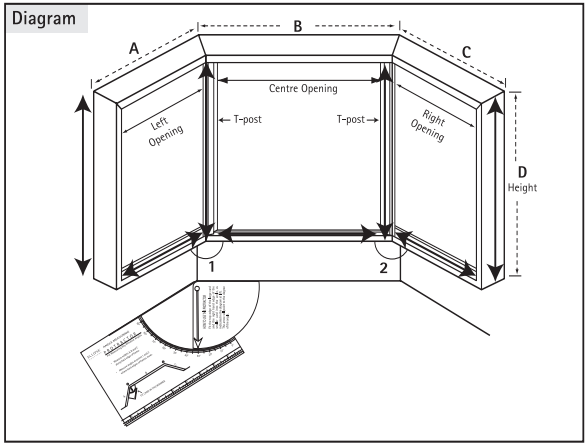

ORDER ACKNOWLEDGEMENT

Items that do not meet product specifications, as detailed in IMPORTANT INFORMATION and in the manual, will be MANUFACTURED WITH A VOID WARRANTY.

Customer Agreement

I agree with the product ordered as reviewed on this form.

Signature:

Frame Cut Outs (All Frame Cut Outs Are 7 Inches)

Line	Side L, R, T, B	Section A, B, C	Type B	Starting Point

- For L or R, starting point is measured from the bottom sill up
- For B or T, starting point is measured from the left opening side

Bay Order Form

* Line	* Room Location	* Operating System	* Split Option	* Colors	Hinge Color	* Louver Size	* Mount Type	Width Ordered to 1/16"	Height Ordered to 1/16"	Panel Configuration	T Post Type	Frame			* Divider Rail #1	* Divider Rail #2	* Divider Rail Type
												Sides	Sill	Ext.			
		G CV TC TOF	Distance Up Inches to Center Split	5136 5140 5151	P S B	2-1/2" 3-1/2" 4-1/2"	IM OM IF	Max single panel 36" Max bi-fold panel 24" Inside Mount = Smallest Opening Size Outside Mount =Largest Frame Size Back of Frame with Extensions	Max. Panel 120"	LTRTR LTLRTR LTLLRTR LTLLRRTR etc.	Large (L) Small (LF)	1,2,3,4 Shade Sides Required	Y, N Shade Sides Required	1 = 1/2 2 = 1 3 = 1-1/2 4 = 2	Distance up required over 66"	Distance Up required over 96"	Standard (S) Deluxe (D)
																	

Important Note: Panel Lock is standard for all applications. If magnets and plates are requested, indicate in the notes section.

Line	Indicate line number start from #1 for ease of referring to a confirmation or sales quotation
Room	Indicate the room name keeping under 12 characters to allow for full name to show on the product labels · Indicate each room different for ease of sorting - (example Bed 1 Left, Bed 1 Centre, Bed 1 Right)
Operating System	G = Gear (Internal Gear System) CV = Rear Tilt (a louver connector attaching to the side of louvers on the back of the panel to the hinge side) TC = Tilt Bar Front Center(a function bar used to tilt louvers with option for Center Front) TOF = Tilt Bar Front Offset Hinge Side(a function bar used to tilt louvers with option for Offset Front)
Split Option	Indicate the distance up from bottom of measurements to the centre of the desired split location or specify louver count on top & bottom · Split may not be exact as requested. It will vary based on louver size · Split can be requested on any of the three operating systems at time of production · Splits should not be modified at installation as additional tension may be required
Colors	· White / Cotton 5136 · Almond / Vanilla 5140 · Ivory / Pearl 5151
Hinge Color	P = Painted S = Stainless Steel B = Brass
Louver Size	2 ½" 3 ½" 4 ½"
Mount Type	IM - Inside Mount - Factory takes deductions - IM Installation holes are predrilled · IM deductions with no frame = 1/4 on total height plus appropriate width deduction based on number of panels · IM deductions with standard frame = 1/16" for any sill or L frame side and 1/8" for any non-sill side · IM deductions with a standard frame with flex = 1/16" for any sill and 3/8" for any non-sill side
	OM - Outside Mount - Factory takes no deductions - OM Installation holes are predrilled
Frame Type	L = IM or OM C = OM Casing T = IM Trim. DT = IM Deluxe Trim. Z = IM Z. B = IM Bullnose Z Hole punches for corner keys will only be available for IM frames - All OM application will be provided with glue
Width	Ordered to the 1/16" Back of frame including any full extension
Height	Ordered to the 1/16" Back of frame including any full extension
	4" top and bottom rail are standard for all heights unless otherwise indicated 2" top and bottom rail are optional under 36" in height and must be requested in notes indicating line numbers
Panel Configuration	Specify where to place the hinges and the configuration starting from the left side of the opening. See manual for all options. L= Left , R = Right, T = T-Post , LL = Left Bi-fold , RR = Right Bi-fold Panel lock is standard - If magnets & plates are to be requested instead of panel lock then indicate in " Notes" on the order form For non-track doors - IE P4D patio doors, panel lock is standard but magnets will also be included.
T-Post Type	L- Large is the standard T Post. 1 ¼" from the face · S-Small – An L Frame is substituted for the T Post. The frame can only be hinged on the light block side of the frame
Frame Side	Indicate numerically the number of frame sides (including any Sill) plus shade in the sides required
Frame Sill	Indicate numerically the number of Sill frame sides plus shade in the sill sides required
L/C Ext	If required - Indicate the number of L Frame or Casing Frame Extensions · For compound Miter application, the OM extensions must be used since frames and panels are made based on ordered dimensions. · If extensions are being used as a fill, then order them separately.
Divider Rail #1	A divider rail is required for support with a varied number of rules · A divider rail is required for other application for heights over 66", a second rail for over 96" · When a divider rail is required the minimum distance between any rail is 20"
Divider Rail Type	S = Standard D = Deluxe with built in pull handle
Order Acknowledgement	Items that do not meet product specification as detailed in the manual, will be manufactured with a void warranty

Specifics for dealer/installer reference only

	Width A	Angle	Width B	Angle	Width C
Top Width Measurements					
Bottom Width Measurements					
	Left Frame Height	T Post 1 Height		T Post 2 Height	Right Frame Height
Height Measurement					

Bay Windows are more likely to be out of square and out of plumb.

- Taking the width measurements at the top and bottom as well as the sides and T Post locations will minimize errors
- From the sides – if measurements from the top and bottom are different, then take the smallest for IM or widest for OM
- For the Center Section – If the measurements are different then take the smallest for both IM and OM
- If the Center Section is off significantly, then and adjustment may need to be calculated for the side panel width(s).
- Use Bay / Bow Protractor for angles. Most Bay angles are between 30 and 55 degrees

Frame Cut Outs (All Frame Cut Outs Are 7 Inches)				
Line	Side L, R, T, B	Section A, B, C	Type B	Starting Point

- For L or R, starting point is measured from the bottom sill up
- For B or T, starting point is measured from the left opening side

All cut outs are 7”

B = removing the frames light block & frame back

- Side cut-outs are measured from the bottom IM sill or OM frame to the starting point of the cut out
- Top or Bottom cut-outs are measured from the left IM Sill or OM frame to the starting point of the cut out
- If the cut out required is over 7”, the full height or full width of the frame must be cut out
- Surcharges are applicable

ALTA
WINDOW FASHIONS

Fax: 866-291-2016
email: cbgshutters@custombrandsgroup.com

Account Name	Acct #	Date
Phone #	Fax #	Page of
PO	Tag Name	
Dealer Contact Name		
Dealer Contact Email		

* Line	* Room Location	* Control System	* Split Option	* Colors	Hinge Colors	* Louver Size	* Mount Type	* Frame Type	Width Ordered to 1/16"	Height Ordered to 1/16"	Panel Configuration	T Post Type	Frame Sides	Frame Sill Sides	Frame Build Out L or C	Divider Rail #1	* Divider Rail #2	* Divider Rail Type
		GE RT TB	Distance Up Inches to Centre	**C** 5136 **P** 5151 **V** 5140	P SS B	2½ 3½ 4½	IM OM IF	L CSF T DT Z BZ S CS SB ST	Max. single panel 36" Max bi-fold panel 24"	Max. panel height 120"	LTLTRTR LTLTRTRTR LTLTLTRRTR etc.	Large **(L)** Small **(LF)**	1, 2, 3, 4 Shade Sides Required	Y, N Shade Sides Required	1 = ½ 2 = 1 3 = 1½ 4 = 2	Distance Up required over 66"	Distance Up required over 96"	Standard **(S)** Deluxe **(D)**
									Inside Mount = Smallest Opening Size **Outside Mount = Largest Frame Size** **Back of Frame with Extensions**									

Specifics for dealer/installer reference only

	Width A	Angle	Width B	Angle	Width C	Angle	Width D	Angle	Width E	Angle	Width F
Top Measurements											
Bottom Measurements											
	Left Frame Height	T Post 1 Height		T Post 2 Height		T Post 3 Height		T Post 4 Height		T Post 5 Height	Right Frame Height
Height Measurement											

***All columns with asterisk must be** filled in for **check measure service to be processed.**

Notes

For compound mitred 3 or 4 sided frames only.

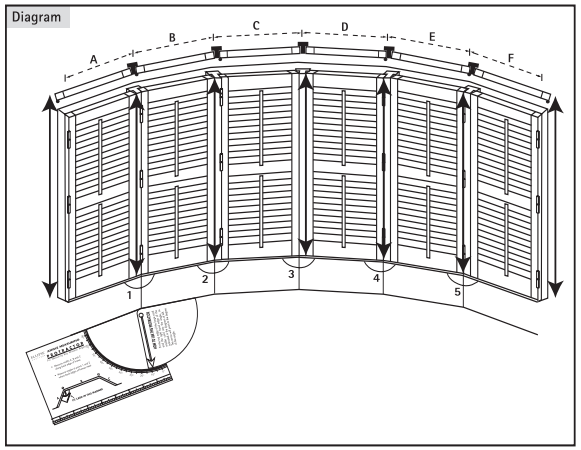

ORDER ACKNOWLEDGEMENT

Items that do not meet product specifications, as detailed in IMPORTANT INFORMATION and in the manual, will be MANUFACTURED WITH A VOID WARRANTY.

Customer Agreement

I agree with the product ordered as reviewed on this form.

Signature:

Frame Cut Outs (All Frame Cut Outs Are 7 Inches)

Line	Side L, R, T, B	Section A, B, C, D, E, F	Type B	Starting Point

- For L or R, starting point is measured from the bottom sill up
- For B or T, starting point is measured from the left opening side

Bow Order Form

* Line	* Room Location	* Operating System	* Split Option	* Colors	Hinge Color	* Louver Size	* Mount Type	* Frame Type	Width Ordered to 1/16"	Height Ordered to 1/16"	Panel Configuration	T Post Type	Frame			* Divider Rail #1	* Divider Rail #2	* Divider Rail Type
													Sides	Sill	Ext.			
		G CV TC TOF	Distance Up Inches to Center Split	5136 5140 5151	P S B	2-1/2" 3-1/2" 4-1/2"	IM OM IF	L, C, T, DT, Z, B, S	Max single panel 36" Max bi-fold panel 24" Inside Mount = Smallest Opening Size Outside Mount =Largest Frame Size Back of Frame with Extensions	Max. Panel 120"	LTLTRTR LTLTRTRTR LTLTLTRRTR etc.	Large (L) Small (LF)	1,2,3,4 Shade Sides Required	Y, N Shade Sides Required	1 = 1/2 2 = 1 3 = 1-1/2	Distance up required over 66"	Distance Up required over 96"	Standard (S) Deluxe (D)
																		

Line	Indicate line number start from #1 for ease of referring to a confirmation or sales quotation
Room	Indicate the room name keeping under 12 characters to allow for full name to show on the product labels · Indicate each room different for ease of sorting - (example Bed 1 Left, Bed 1 Center, Bed 1 Right)
Operating System	G = Gear (Internal Gear System) CV = Rear Tilt (a louver connector attaching to the side of louvers on the back of the panel to the hinge side) TC = Tilt Bar Front Center(a function bar used to tilt louvers with option for Center Front) TOF = Tilt Bar Front Offset Hinge Side(a function bar used to tilt louvers with option for Offset Front)
Split Option	Indicate the distance up from bottom of measurements to the center of the desired split location or specify louver count on top & bottom · Split may not be exact as requested. It will vary based on louver size · Split can be requested on any of the three operating systems at time of production · Splits should not be modified at installation as additional tension may be required
Colors	· White / Cotton 5136 · Almond / Vanilla 5140 · Ivory / Pearl 5151
Hinge Color	P = Painted S = Stainless Steel B = Brass
Louver Size	2 ½" 3 ½" 4 ½"
Mount Type	IM - Inside Mount - Factory takes deductions - IM Installation holes are predrilled · IM deductions with no frame = 1/4 on total height plus appropriate width deduction based on number of panels · IM deductions with standard frame = 1/16" for any sill or L frame side and 1/8" for any non-sill side · IM deductions with a standard frame with flex = 1/16" for any sill and 3/8" for any non-sill side
	OM - Outside Mount - Factory takes no deductions - OM Installation holes are predrilled
Frame Type	L = IM or OM C = OM Casing T = IM Trim. DT = IM Deluxe Trim. Z = IM Z. B = IM Bullnose Z Hole punches for corner keys will only be available for IM frames - All OM application will be provided with glue
Width	Ordered to the 1/16" Back of frame including any full extension
Height	Ordered to the 1/16" Back of frame including any full extension
	4" top and bottom rail are standard for all heights unless otherwise indicated 2" top and bottom rail are optional under 36" in height and must be requested in notes indicating line numbers
Panel Configuration	Specify where to place the hinges and the configuration starting from the left side of the opening. See manual for all options. L = Left , R = Right, T = T-Post , LL = Left Bi-fold , RR = Right Bi-fold Panel lock is standard - If magnets & plates are to be requested instead of panel lock then indicate in " Notes" on the order form For non-track doors - IE P4D patio doors, panel lock is standard but magnets will also be included.
T-Post Type	L- Large is the standard T Post. 1 ¼" from the face · S-Small – An L Frame is substituted for the T Post. The frame can only be hinged on the light block side of the frame
Frame Side	Indicate numerically the number of frame sides (including any Sill) plus shade in the sides required
Frame Sill	Indicate numerically the number of Sill frame sides plus shade in the sill sides required
L/C Ext	If required - Indicate the number of L Frame or Casing Frame Extensions · For compound Mitre application, the OM extensions must be used since frames and panels are made based on ordered dimensions. · If extensions are being used as a fill, then order them separately.
Divider Rail #1	A divider rail is required for support with a varied number of rules · A divider rail is required for other application for heights over 66", a second rail for over 96" · When a divider rail is required the minimum distance between any rail is 20"
Divider Rail Type	S = Standard D = Deluxe with built in pull handle
Order Acknowledgement	Items that do not meet product specification as detailed in the manual, will be manufactured with a void warranty

Specifics for dealer/installer reference only

	Width A	Angle	Width B	Angle	Width C	Angle	Width D	Angle	Width E	Angle	Width F
Top Measurements											
Bottom Measurements											
	Left Frame Height	T Post 1 Height		T Post 2 Height		T Post 3 Height		T Post 4 Height		T Post 5 Height	Right Frame Height
Height Measurement											

Bow Windows are more likely to be out of square and out of plumb.

- Taking the width measurements at the top and bottom as well as the sides and T Post locations will minimize errors
- From the sides – if measurements from the top and bottom are different, then take the smallest for IM or widest for OM
- For the Center Section – If the measurements are different then take the smallest for both IM and OM
- If the Center Section is off significantly, then and adjustment may need to be calculated for the side panel width(s).
- Use Bay / Bow Protractor for angles. Most Bow angles are between 30 and 55 degrees

Frame Cut Outs (All Frame Cut Outs Are 7 Inches)				
Line	Side L, R, T, B	Section A, B, C, D, E, F	Type B	Starting Point

- For L or R, starting point is measured from the bottom sill up
- For B or T, starting point is measured from the left opening side

All cut outs are 7”

B = removing the frames light block & frame back

- Side cut-outs are measured from the bottom IM sill or OM frame to the starting point of the cut out
- Top or Bottom cut-outs are measured from the left IM Sill or OM frame to the starting point of the cut out
- If the cut out required is over 7”, the full height or full width of the frame must be cut out
- Surcharges are applicable

Decorative Sill Cover Order Form

ALTA
WINDOW FASHIONS

Fax: 866-291-2016
email: cbgshutters@custombrandsgroup.com

Bill To:	Date:
	Account #:
	P.O.#:
Ship To Address: ○ Residential ○ Commercial ○ Will Call	Sidemark:
	Ordered by:
	Phone #:
	Fax #:

Page of	Job #:

For Reference consult the Ordering Key and Standard Dimensions Chart on the reverse side of this worksheet.

Ordering a Decorative Sill Cover to Align with Shutters

1. Measure the existing Window Sill that the Decorative Sill Cover will enclose.
2. Determine the A, B and C dimensions by using the following calculations to compare against the Standard Dimensions Chart and record in **box 3**:
   - Ear Width + ½"clearance = A (Sill Cover Ear Width)
   - Ear Projection + ½" clearance = B (Sill Cover Ear Projection)
   - Sill Cover Depth into the opening (Dimension C) is predetermined to align the back of the sill cover with the back of the shutter frame. It may be possible to extend the depth further than the standard dimension, Record C. **See sill cover size limitation chart.**
3. If A, B or C dimensions are the same or less than the Standard Dimensions Chart and your window sill height is 7/8" or less, **check the Standard Dimension in box 4**.
   If A, B or C dimensions are greater than the Standard Dimensions Chart and your window sill height is 7/8" or less, **order as a Special Application in box 4**. Calculated dimensions A, B & C become your ordered sizes. **See sill cover size limitation chart.**

Ordering Sill Cover Only (Without a Shutter)

1. Check the Sill Cover Only in **box 4**.
2. For both Inside Mount (IM) or Outside Mount (OM), measure and record the Window Opening Width.
3. Determine the A, B and C dimensions by using the following calculations. Record in **box 3**:
   - Ear Width + ½"clearance = A (Sill Cover Ear Width)
   - Ear Projection + ½" clearance = B (Sill Cover Ear Projection)
   - Sill Cover depth into the opening = C

Note: See sill cover size limitation chart for A, B & C dimensions.

SILL COVER SIZE LIMITATIONS

Minimum:	A: ½"	B: 1 11/16"	C: 0"
Maximum†:	A: 12"	B: 3 15/16"	C: 2 ¼"

†The sum of B and C cannot be more than 3 15/16"

Window Sill Dimensions

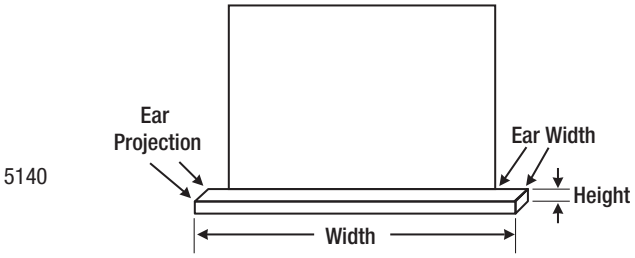

Decorative Sill Cover Dimensions

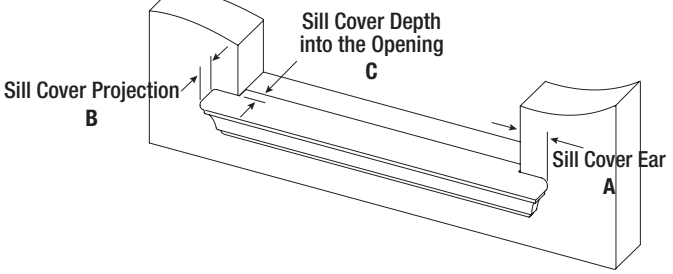

		Order Form Page # _____ Line #_____ Room _____	Order Form Page # _____ Line #_____ Room _____	Order Form Page # _____ Line #_____ Room _____	Order Form Page # _____ Line #_____ Room _____	
1	Quantity	1	1	1	1	1
2	Color #	○ 5136 ○ 5140 ○ 5138 ○ 5151	○ 5136 ○ 5140 ○ 5138 ○ 5151	○ 5136 ○ 5140 ○ 5138 ○ 5151	○ 5136 ○ 5140 ○ 5138 ○ 5151	2
3	Calculated Dimensions	A _____ B_____ C_____	A _____ B_____ C_____	A _____ B_____ C_____	A _____ B_____ C_____	3
4	Ordered Dimensions: Check one of the three options and record required dimensions.	○ Standard Dimensions	○ Standard Dimensions	○ Standard Dimensions	○ Standard Dimensions	4
		○ Special Application Window Opening Width_____ (Must record A, B, & C above)	○ Special Application Window Opening Width_____ (Must record A, B, & C above)	○ Special Application Window Opening Width_____ (Must record A, B, & C above)	○ Special Application Window Opening Width_____ (Must record A, B, & C above)	
		○ Sill Cover ONLY Window Opening Width_____ (Must record A, B, & C above)	○ Sill Cover ONLY Window Opening Width_____ (Must record A, B, & C above)	○ Sill Cover ONLY Window Opening Width_____ (Must record A, B, & C above)	○ Sill Cover ONLY Window Opening Width_____ (Must record A, B, & C above)	
	Special Instructions					

Decorative Sill Cover Order Form Key

1) Quantity = 1 (Please complete one line item for each opening)

2) Color Specify color number.

5136 = Cotton
5140 = Vanilla **5151** = Pearl

3) Calculated Sill Cover Dimensions for A, B & C

4) Ordered Sill Cover Dimensions

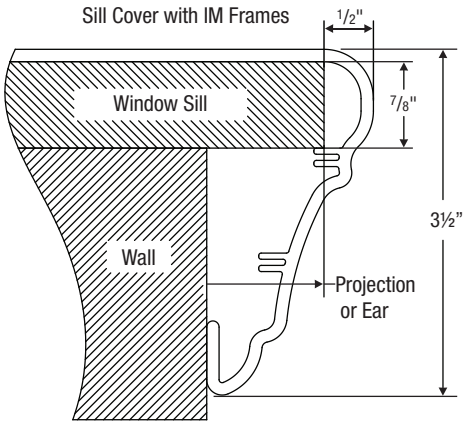

Decorative Sill Cover Standard Dimensions Chart

(From the Reference Guide)

Notes:
- The following dimensions assume the standard reveal of 1/4".
- Maximum window sill ear is ½" less than A value.
- Maximum window sill projection is ½" less than B value.
- Maximum window sill height is 7/8"
- On OM applications the A value includes the standard reveal of 1/4"

Frame Type	A	B	C
Casing Frame	3 9/16"	2 15/16"	0"
L Frame OM	2 3/16"	2 3/4"	0"
Casing Sill Frame OM	2 3/16"	2 15/16"	0"
L Frame IM	1 1/8"	1 11/16"	2 1/16"
Casing Sill Frame IM	1 1/8"	1 11/16"	2 1/4"
Z Frame	1 1/8"	1 11/16"	1 1/4"
Trim Frame	1 15/16"	1 11/16"	1 1/8"
Mounting Strip OM	1 7/8"	2 3/4"	0"
Mounting Strip IM-HSS	1 1/8"	1 11/16"	2 1/16"
Mounting Strip IM-HSB	1 1/8"	1 11/16"	2 1/8"
Deluxe Trim Frame	2 11/16"	1 11/16"	1 1/8"
Bullnose Z Frame	2"	1 11/16"	1 5/16"

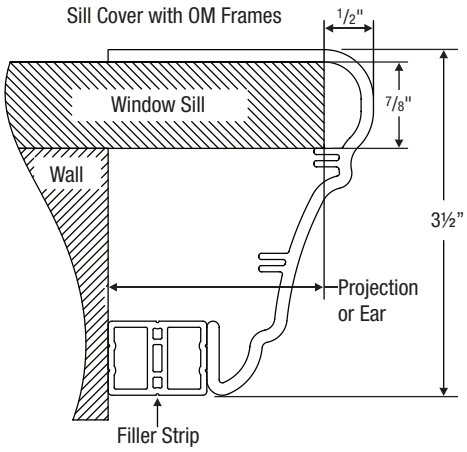

SILL COVER SIZE LIMITATIONS

Minimum:	A: ½"	B: 1 11/16"	C: 0"
Maximum†:	A: 12"	B: 3 15/16"	C: 2 ¼"

†The sum of B and C cannot be more than 3 15/16"

Decorative Sill Cover Dimensions

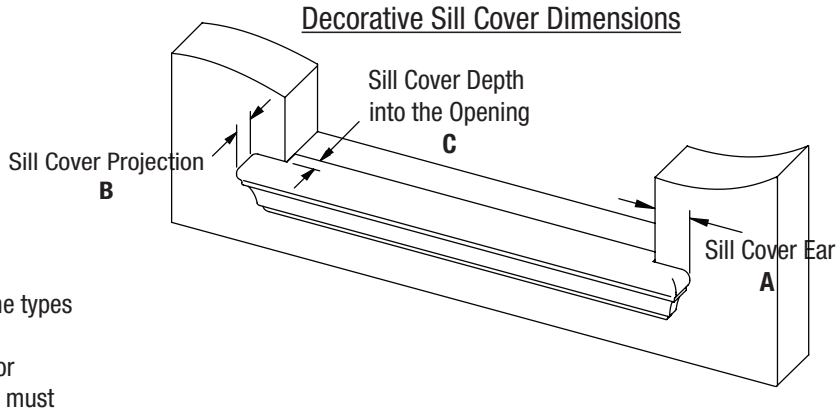

ORDERING CONSIDERATIONS

- The Decorative Sill Cover can be configured with all frame types and without frame applications.
- Inside (IM) mount frames can be used with two-, three- or four-sided frames. All four-sided and Outside (OM) frames must be ordered with a sill bottom frame.
- All IM L-frames are assumed flush mount.
- T-post installations are limited to four-sided frame applications.
- Appropriate filler strip will accompany orders on OM applications to fill any gaps behind the Decorative Sill Cover.
- The back of the sill cover will align with the back of the frame.

SPECIAL APPLICATIONS

The Decorative Sill Cover can be ordered wider than the dimensions listed in the Standard Dimesions Chart if necessary.
- OM frames can be ordered with a Decorative Sill Cover to extend into the opening by ordering as a Special Application.
- See sill cover size limitation chart.

A

SELLING

Features and Benefits

Traditional Look
The look and quality your customers demand but at the cost and durability of Polyresin 3®.

Low Maintenance
The Polyresin 3® Eclipse® Shutter is easy to clean with just soap and water.

Environmentally Friendly
Eclipse® Shutters do not destroy our forests. All scrap is recycled.

Made from Polyresin 3®
A colorfast compound with UV stabilizers designed with strength and durability, yet retaining a special warmth and feel. Shutters will not warp, shrink, chip, peel, or fade and never need painting.

Fire Retardant
Polyresin 3® is fire retardant and self-extinguishing. It is safe to use in residential and commercial applications. Meets (NFPA701) National Fire Code Standards.

Waterproof
Ideally suited for use above kitchen sinks, bathrooms or other high humidity areas. Eclipse® Shutters have no unsightly staples which may rust, and will not warp or crack due to water exposure.

Additional Insulator
An R-value of 3.40 helps to reduce heating and air costs and outside noise. Closing the louvers upward can help keep heat in the home and provide more privacy.

Modern Manufacturing
Custom crafted in state-of-the-art computerized production facilities that meet today's demanding quality standards.

Colors
Cotton, Pearl and Vanilla

Best for Kids™ Certified
This third party certification program specifies criteria to identify window covering products that are best suited for use in homes or in facilities in which young children are expected to be present.

Features and Benefits

Elliptical Louver Sizes
2 1/2”, 3 1/2”, and 4 1/2”

Tilt Bar
Provides the time honored look associated with shutters. Louvers can be opened or closed in both directions, unlike other shutters which are one-directional only. Our unique connector system has eliminated unsightly staples which tend to rust or break.

Rear Tilt System
A hidden tilt system located on the rear of each panel. Rear Tilt is attached to the hinge side of the louvers, resulting in a clean, contemporary look.

Pantented Gear System
This is the ultimate in hidden gear systems. Gear is completely enclosed within shutter stile and provides a smooth, easy louver operation.

Patented Seamless Louver Caps
Innovative seamless capping technology eliminates the seam between the louver body and the end cap, for a sleek and modern look.

Panel Lock with Roller
This unique system eliminates the use of magnets. When panels are closed, a spring-loaded plunger with roller acts as a ball catch to hold the panels in the closed position.

Frame Grooves
The spring loaded roller of the panel lock locates the integrated groove in all frames. Eliminates the need for magnets and catch plates.

Exclusive Deluxe Divider Rail
The unique design of this rail integrates a handle which provides a clean and easy method of opening shutters. Offered as an option to the existing regular divider rail, the deluxe divider rail is the ultimate in functionality, design, and elegance.

Snap and Hold Corner Key and Notched Frames
Our snap and hold corner key and notched frames were developed to eliminate the use of glue and provide a clean, quick and easy installation. All frames, excluding L-Frame outside mount, with a 45-degree miter are notched to accept this corner key.

Aluminum Jamb Inserts
Provides a hidden reinforcement for patio door shutters and larger shutter panels.

French Door Cutouts
Our French Door Cutout is ideal for adding shutters to French doors. The Cutout is designed to work with standard round door handles and lever handles. Available with all louver sizes.

Pre-drilled Frames
Pre-drilled installation holes are strategically placed on all frames for accurate, quick, and clean installation.

Factory Installed Two Part Hinge System
Quick and easy to install. Allows panels to be removed easily for cleaning. Panels open fully for total access to the windows.

LightBlock, Interlock (astragal) and FlexBlock
Exclusive to Eclipse® Shutters, they provide an insulating seal and cover unwanted light gaps between panels.

Adjustable Jamb Cap
If adjustments are required, the screw located on the bottom of each panel can be threaded in or out of the cap accordingly. Thread into the panel until the screw is virtually invisible when adjustments are not needed. (Available only with magnet applications)

Permanent UltraSatin™ Finish
Our Polyresin 3® compound features a permanent finish resistant to dents and scratches. Should a scratch occur, it can be removed without harming the finish.

Warranty
Eclipse® Shutters are backed with a 25-Year Warranty. Note: Eclipse fabricators reserve the right to refuse manufacture of out-of-spec or void warranty product.

Shutter Panel Parts

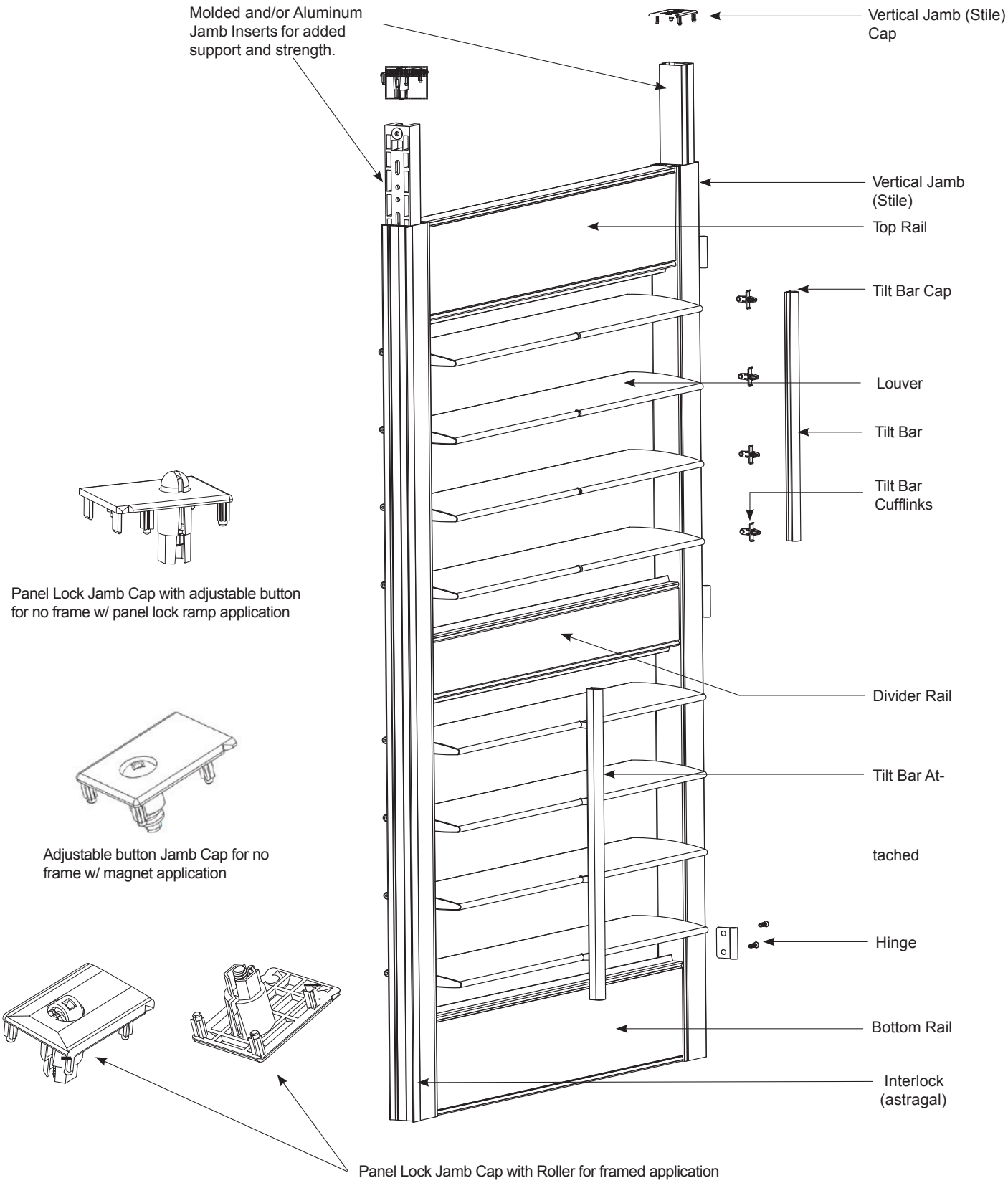

Rear Tilt (Clearview) System

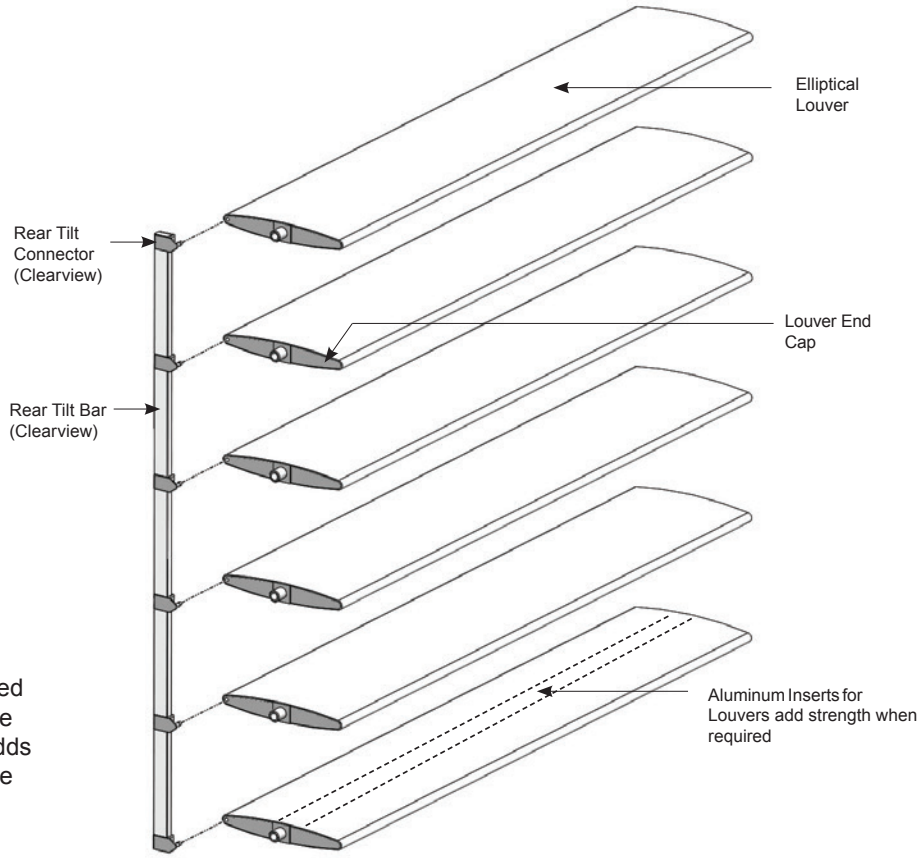

Rear Tilt (Clearview) is located on back of panel on the hinge side. Rear Tilt (Clearview) adds an additional protection to the back of the louvers.

Gear System

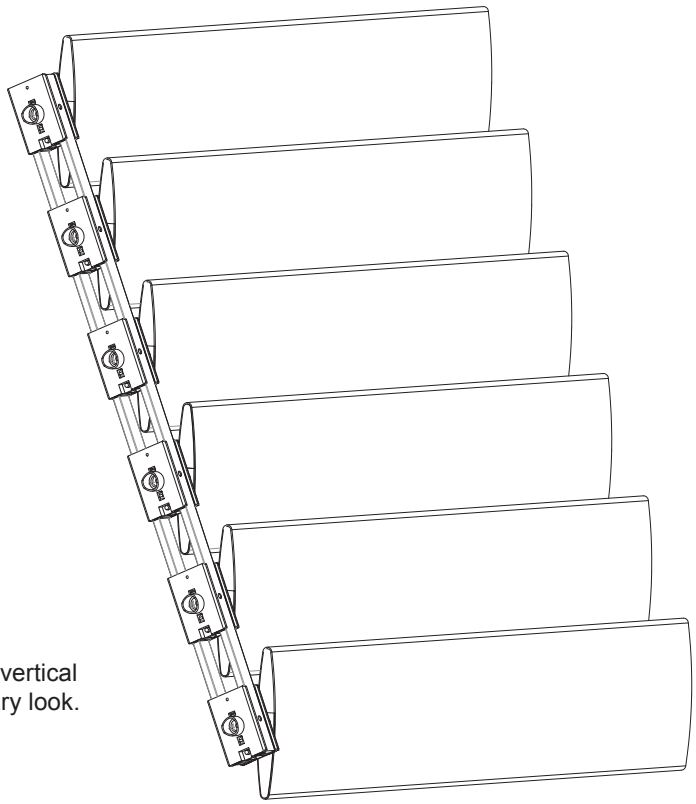

Gear assembly is located inside the vertical jamb, providing a clean, contemporary look.

Louver Sizes

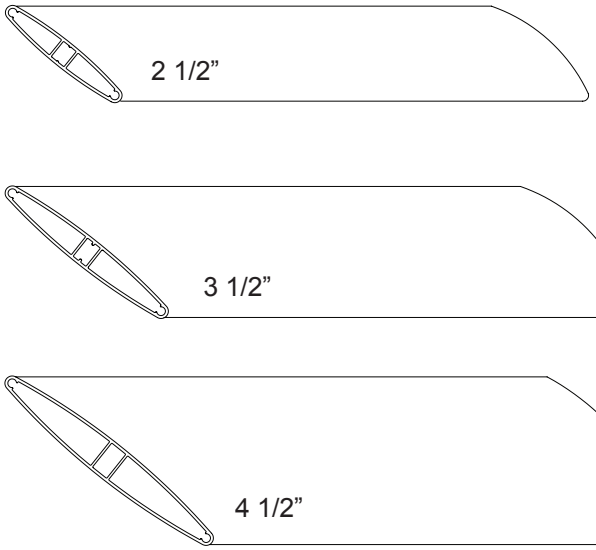

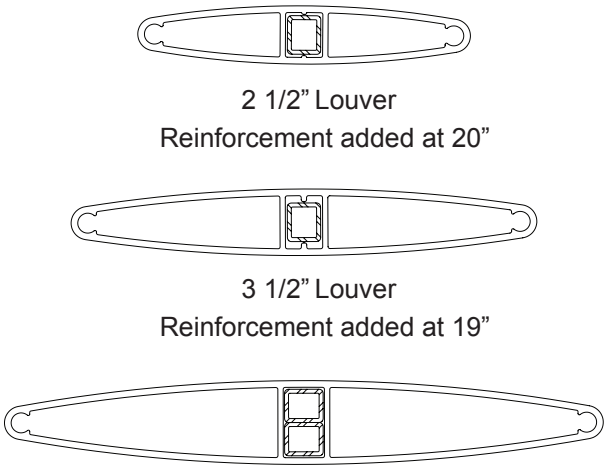

2 1/2” Louver
Reinforcement added at 20”

3 1/2” Louver
Reinforcement added at 19”

4 1/2” Louver
Reinforcement added at 22”

Divider Rail Sizes

Used to divide top louvers from bottom louvers within the same panel

Regular

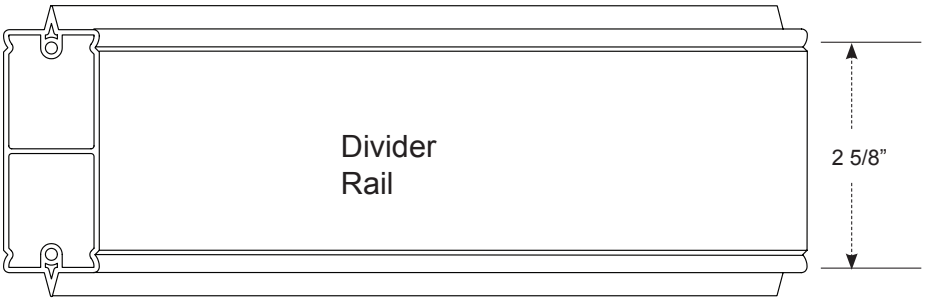

Deluxe

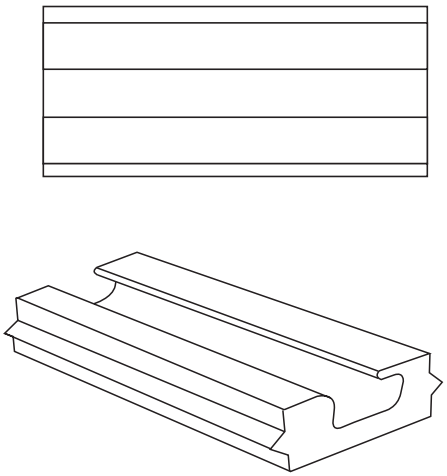

Note: Divider rail must be used on panels 66” and longer. Two Divider Rails must be used on panels 96” and longer, with less than 66” between rails.

The exclusive Deluxe Divider Rail provides a clean and easy method of opening shutters. This Deluxe Divider Rail with the built-in handle is an option to the regular divider rail.

Bullnose Z Frame with Flex (BZ Frame) & Sill

Used for inside mounts in openings with drywall returns and without trim and includes a 3/8" standard IM deduction. May be ordered with Sill Frame at bottom for openings with a window sill. Because the extended leg has been removed, the bottom frame will sit flat on window sill. The Sill Frame will be positioned at the bottom unless otherwise specified. Light block is 5/16"

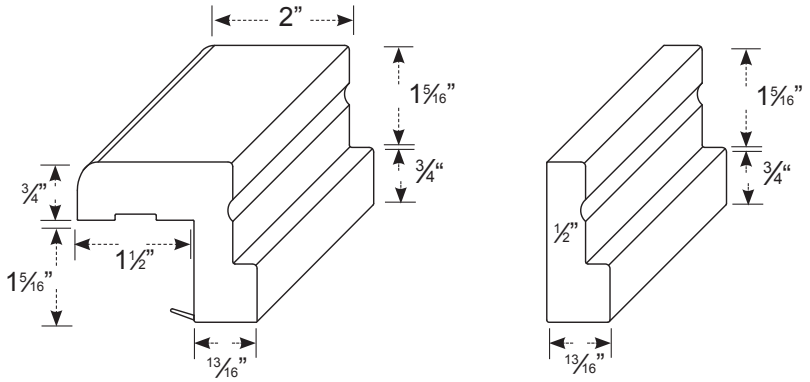

Deluxe Trim Frame (D Frame) & Sill

Used for inside mounts in openings with drywall returns and without trim and includes a 1/4" standard IM deduction. May be ordered with Sill Frame at bottom for openings with window sill. Because the extended leg has been removed, the bottom frame will sit flat on the window sill. The Sill Frame with be positioned at the bottom unless otherwise specified. Light Block is 5/16"

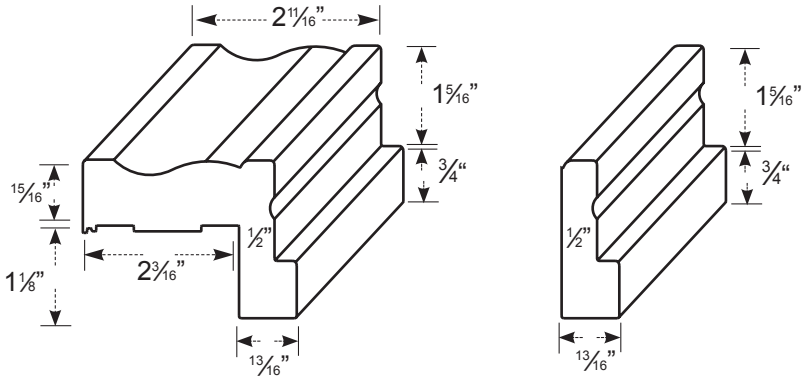

Trim Frame with Flex (T Frame) & Sill

Used for inside mounts in openings with drywall returns and without trim and includes a 3/8" standard IM deduction. May be ordered with Sill Frame at bottom for openings with a window sill. Because the extended leg has been removed, the bottom frame will sit flat on window sill. The Sill Frame will be positioned at the bottom unless otherwise specified. Light block is 5/16"

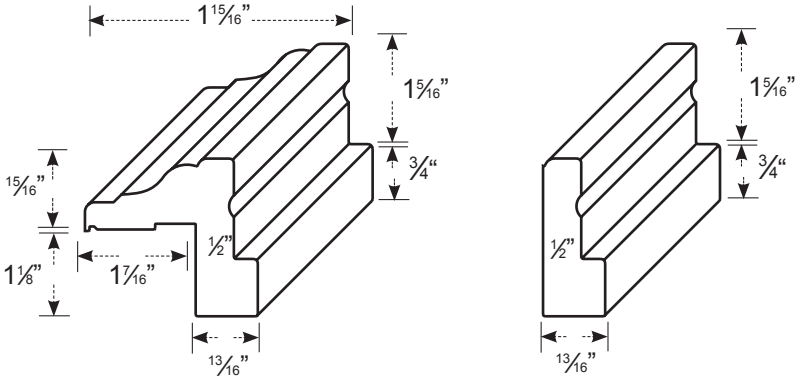

Z-Frame & Sill

Used for inside mount applications only. Blends well with all types of trim and includes a 1/4" standard IM deduction. Excellent for slightly out of square windows because the extended leg covers many imperfections. Jamb depth required is a minimal 1 1/4". May be ordered with Sill Frame at the bottom for openings with a window sill. Because extended leg has been removed, the bottom frame will sit flat on a window sill. The Sill Frame will be positioned at the bottom unless otherwise specified. Light block is 5/16"

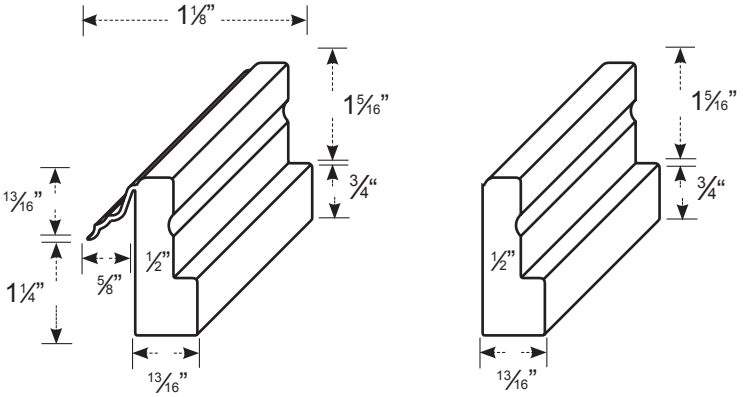

L-Frame

May be used for inside mounts if window openings are square (a 1/8” IM deduction standard), or outside mounts directly on top of trim or beside trim. For an inside mount, caulking or the optional L-Frame Cover Strip may be necessary to cover any uneven gaps. The optional L-Frame Cover Strip may be ordered on the Order Form. The Cover Strip is glued to the face of the L-Frame. Light block is 9/16”.

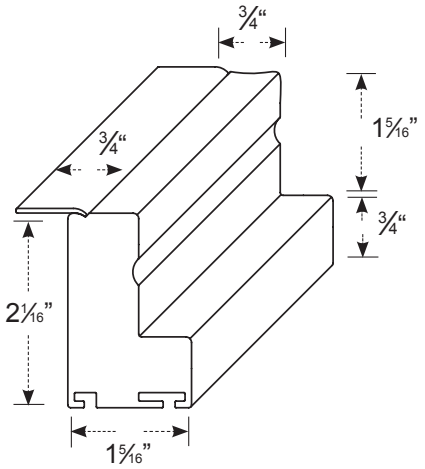

L-Frame with 1/2” extension added

Used for outside mount installations with the 2 1/2” louver. Usually used when the frame is installed beside the trim or to clear any obstructions. Additional extensions may be requested on the Order Form if required. Light block is 9/16”.

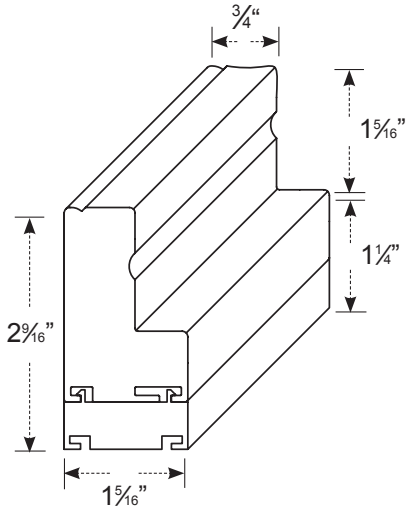

L-Frame with two 1/2” extensions added

Used for outside mount installations with the 3 1/2” louver. Usually used when the frame is installed beside the trim or to clear any obstructions. Additional extensions may be requested on the Order Form if required.

Note: Casing Sill Frame can be used in place of L-Frame. The Casing Sill Frame is 3/8” taller, has a decorative face and accepts the L-Frame extension when additional projection is needed. Light block is 9/16”.

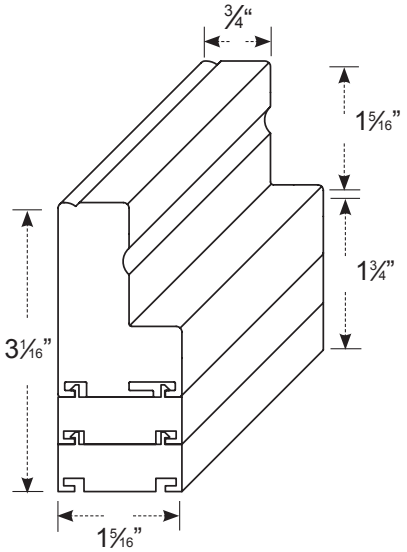

Casing Frame (C-Frame)

Used for outside mount only. Installed on the wall or directly on top of an existing trim. When installing on top of an existing trim, an optional C-Frame Cover Strip may be requested on the Order Form. The C-Frame Cover Strip covers the gap created between the back of the frame and the front of the trim. The Cover Strip is inserted into the C-Frame. The Casing Frame Extension adds 1/2” projection to the shutter. Light block is 9/16”.

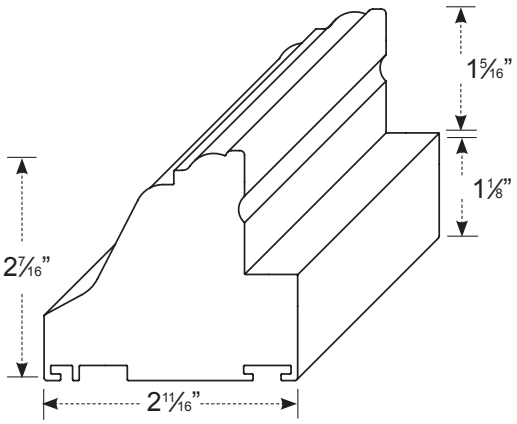

Casing Sill Frame

Used in conjunction with the Casing Frame in outside mount applications, the Casing Sill Frame will sit flat on a window sill. The Casing Sill Frame will be positioned at the bottom unless otherwise specified. May also be used as a stand alone frame. Use the Casing Sill as an alternative to the L Frame in both inside and outside mount applications. Light block is 9/16”.

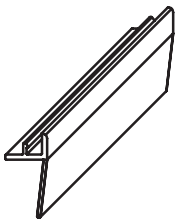

Casing Frame Cover Strip

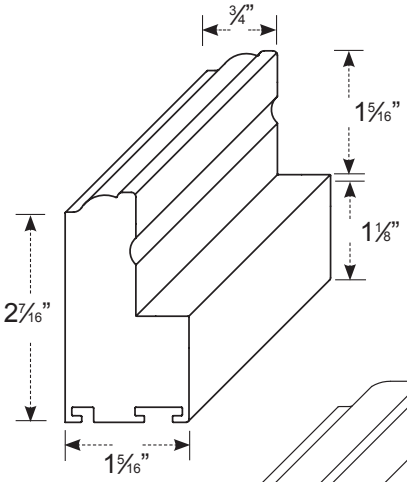

S Frame

Used for outside mount only. Installed on the wall or directly on the top of existing trim. An optional S Frame cover strip is available upon request, and can also be used with the S Frame Extension. Since the S Frame is more narrow than most trim, the inside of the frame should align with inside of the trim to use the cover strip. Light block is 9/16”.

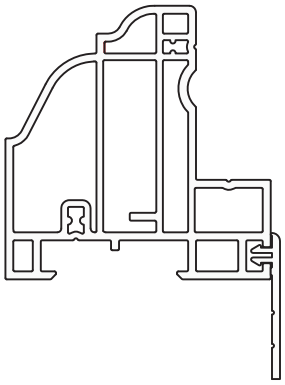

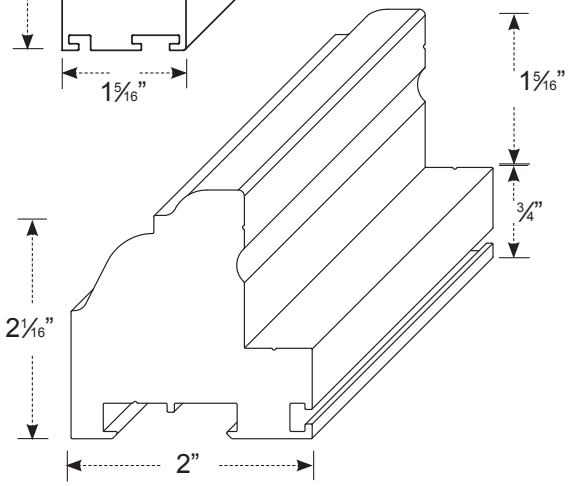

S Sill Frame

Use in conjunction with the S Frame in outside mount applications, the S Sill Frame will sit flat on a window sill. The S Sill Frame will be positioned at the bottom unless otherwise specified. Light block is 9/16”.

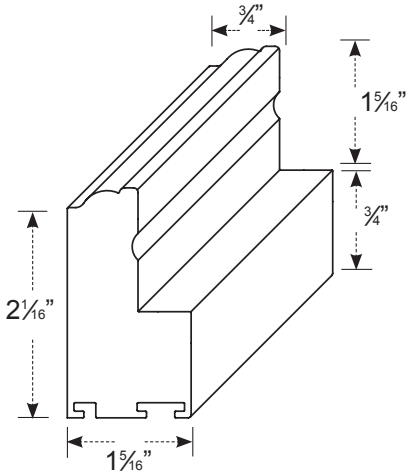

Mounting Strip

Used in conjunction with adjustable bent-leaf hinges for inside mounts without frames or as a light block mounted on the inside of panels which are installed without frames. It is not visible from inside the room. Unless requested otherwise, 3/4” x 3/4” will be supplied.

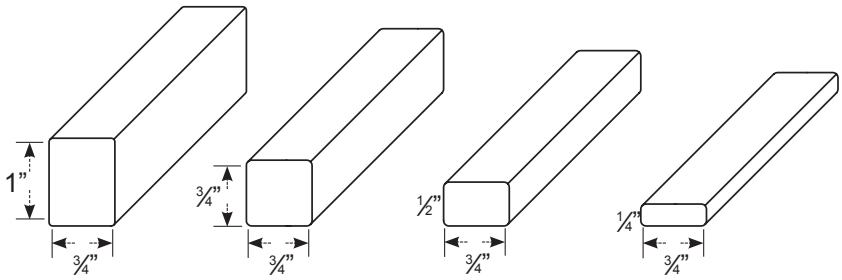

T-Post

Used to separate and hinge multiple panels in wide openings. Usually placed directly in front of any existing window dividers. It is notched to fit into the frames, or can be installed to existing opening with L brackets. Light block is 9/16”.

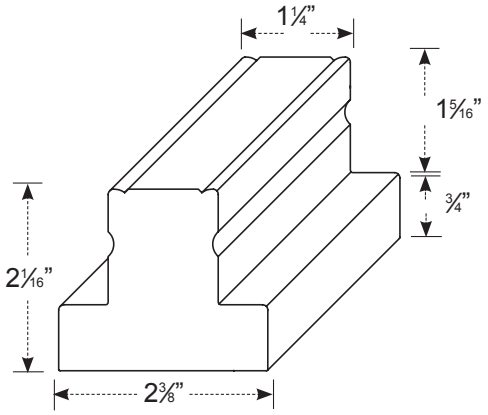

Shutter Accessories

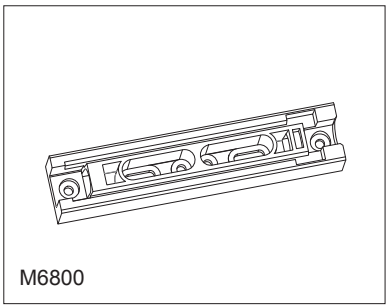

1. Molded Insert for Jambs

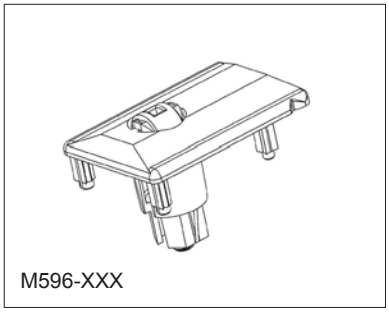

2. Panel Lock Jamb Cap with Roller for framed application

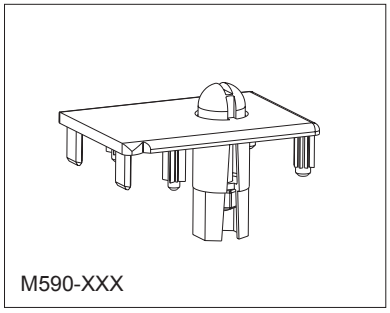

3. Panel Lock Jamb Cap with adjustable button for no frame w/ panel lock ramp application

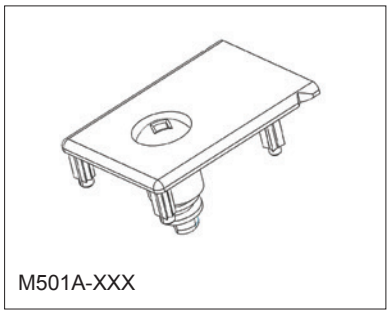

4. Adjustable button Jamb Cap for no frame w/ magnet application

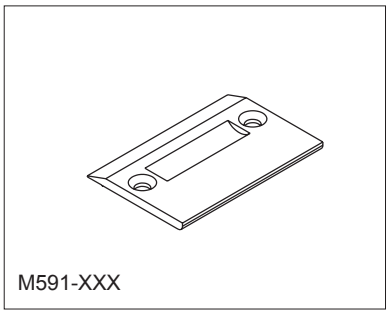

5. Panel Lock Ramp

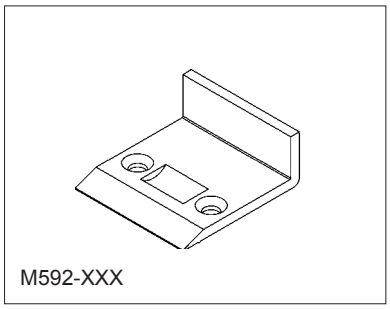

6. Panel Lock Ramp with Back

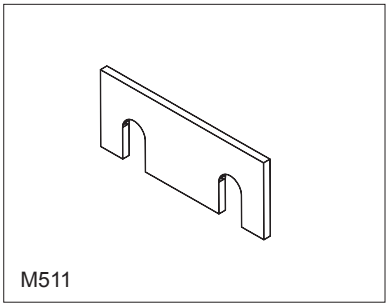

7. Hinge Shims

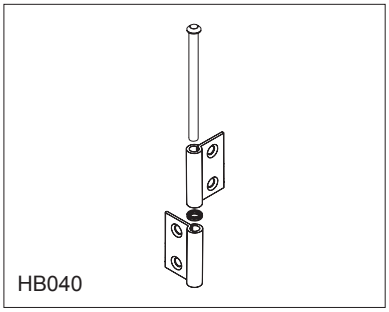

8. Hinge Bushing

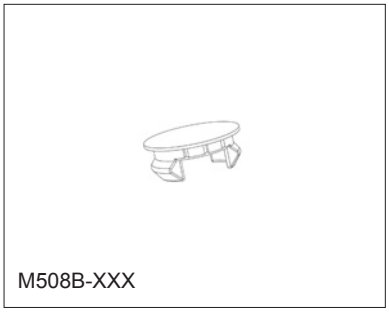

9. 3/8” Button Plug

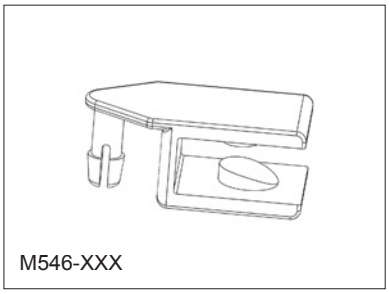

10. Rear Tilt Connector

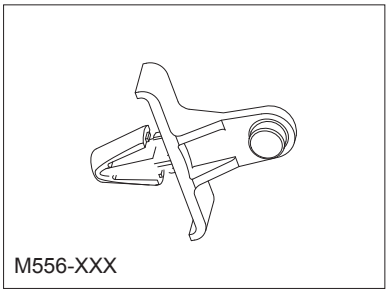

11. Front Tilt Bar Cufflink

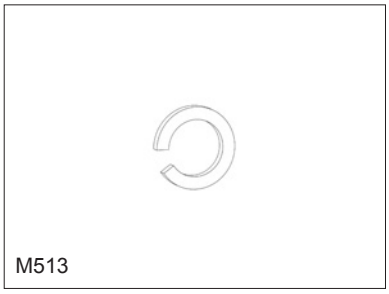

12. Louver Tensioner

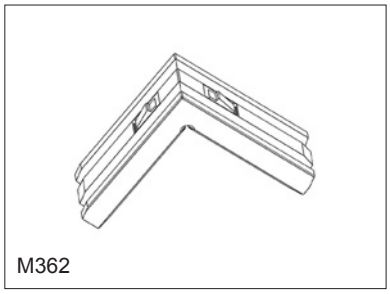

13. Corner Key

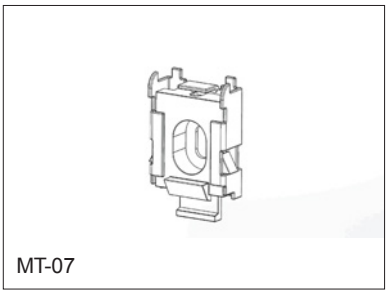

14. Valance Bracket

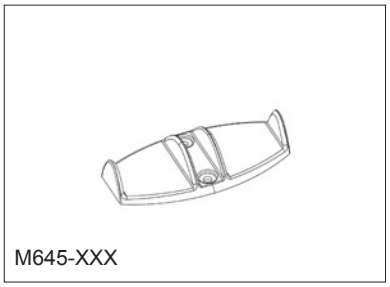

15. Small Floor Guide

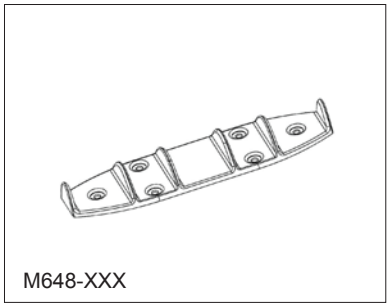

16. Large Floor Guide

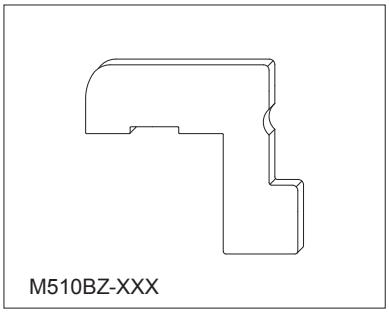

17. Bullnoze Z Frame Cap

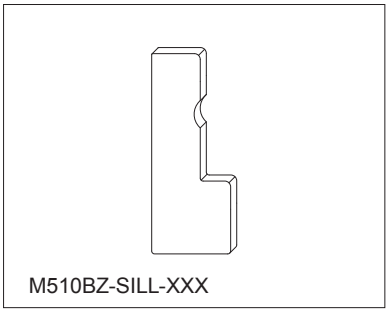

18. Bullnoze Z Sill Cap

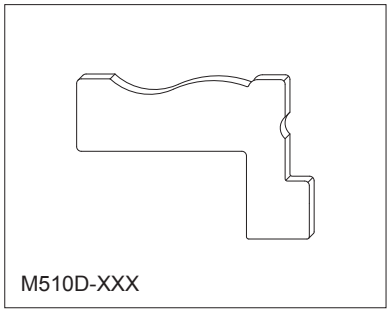

19. Deluxe Trim Frame Cap

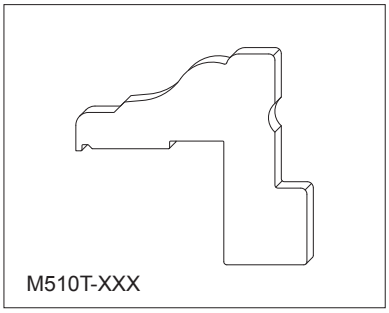

20. Trim Frame Cap

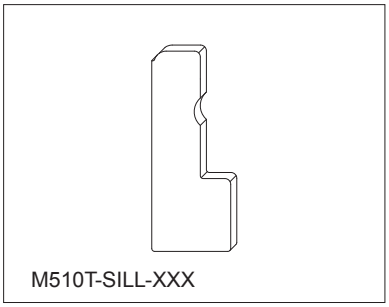

21. Sill Trim Frame Cap

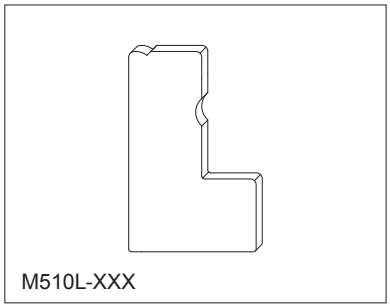

22. L Frame Cap

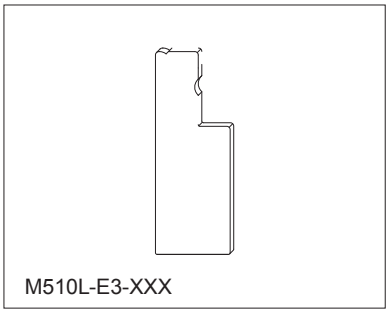

23. L Frame + 3 Extensions Cap

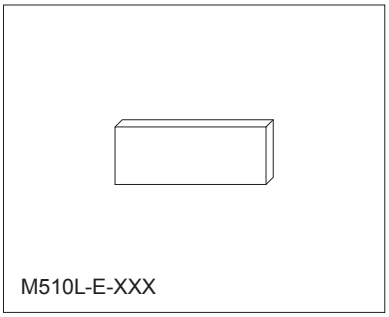

24. L Frame Extension Cap

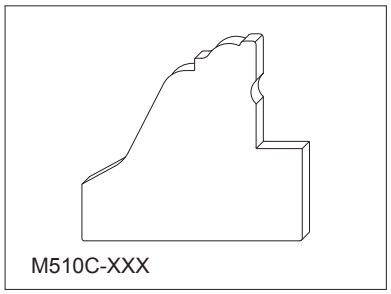

25. Casing Frame Cap

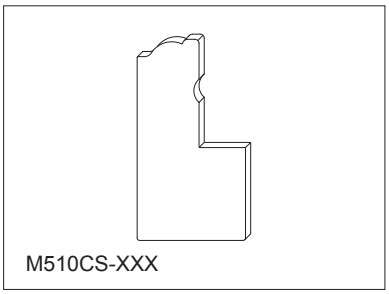

26. Casing Sill Frame Cap

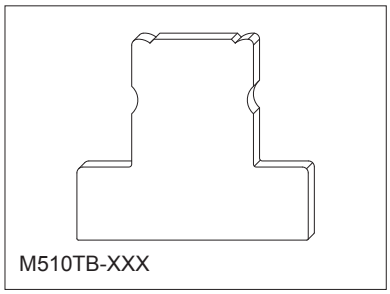

27. T Post Cap

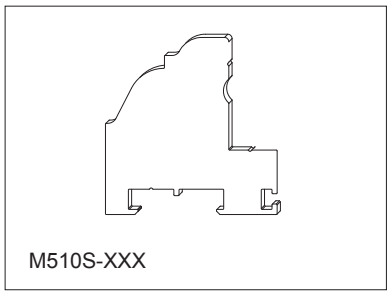

28. S Frame Cap

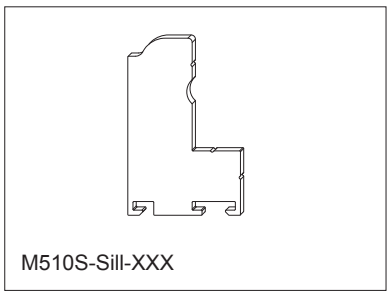

29. S Sill Frame Cap

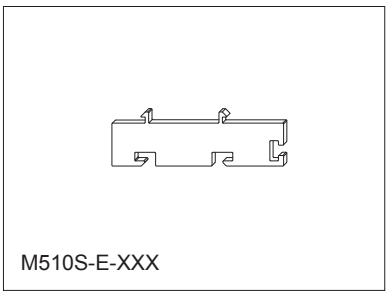

30. S Frame Extension Cap

Shutter Accessories

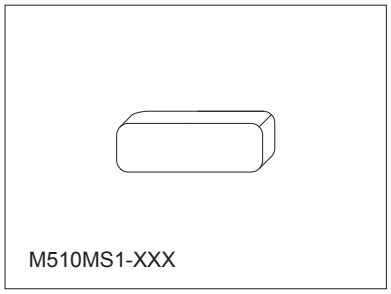

31. 1/4” x 3/4” Mounting Strip Cap

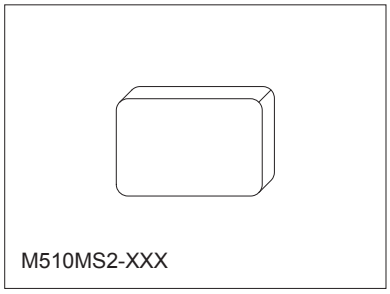

32. 1/2” x 3/4” Mounting Strip Cap

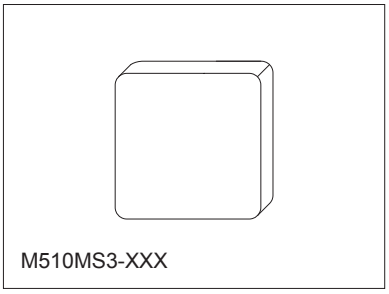

33. 3/4” x 3/4” Mounting Strip Cap

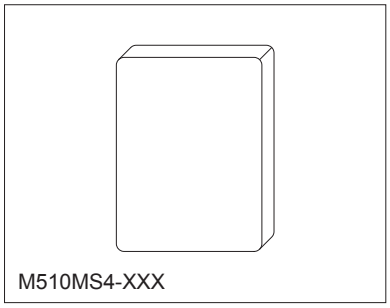

34. 1” x 3/4” Mounting Strip Cap

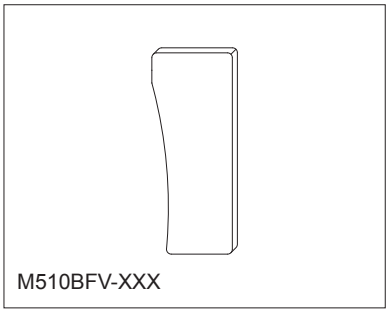

35. Bi-fold Valance Cap

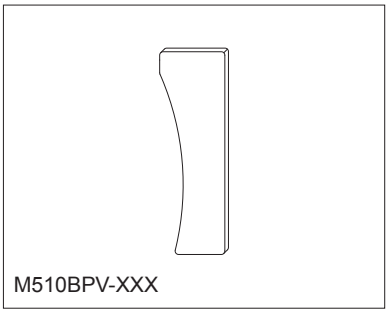

36. By-pass Valance Cap

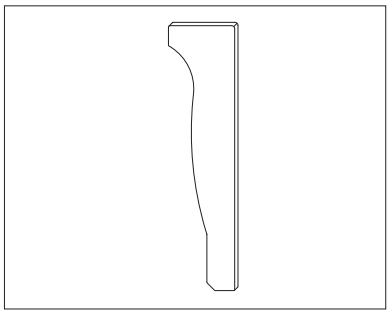

37. Crown Valance Cap

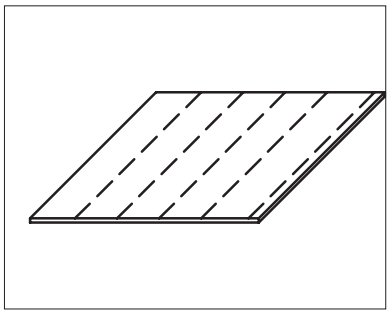

38. Scribe

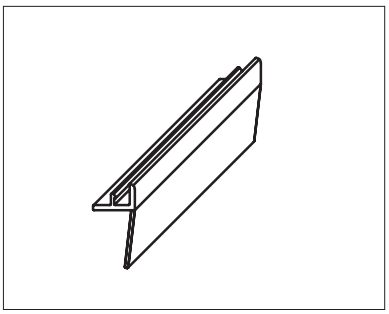

39. Casing Frame Cover Strip

B

PANEL CONFIGURATIONS AND HINGING

P1-L (left hinge) two, three, or four sided frame

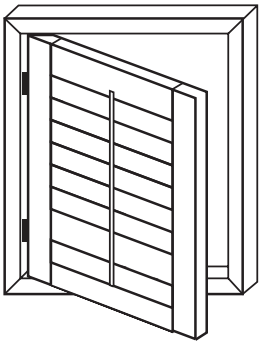

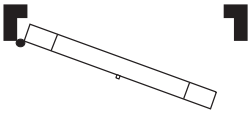

Left Hinge

	2 1/2”	3 1/2”	4 1/2”
• Minimum Width:	6”	6”	6”
• Maximum Width:	36”	36”	36”
• Minimum Height:	16”	16”	16”
• Maximum Height:	120”	120”	120”

Note: Panels less than 18” in height are not recommended, due to the excessive louver overlap that may occur.

P1DH-L Double Hung (left hinge) two, three, or four sided frame

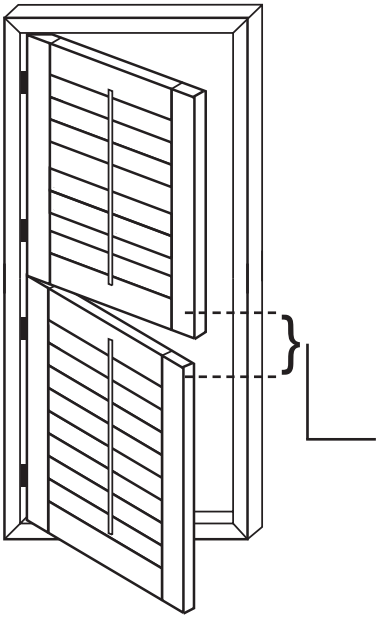

	2 1/2”	3 1/2”	4 1/2”
• Minimum Width:	6”	6”	6”
• Maximum Width:	30”	30”	30”
• Minimum Height:	32”	32”	32”
• Maximum Height:	120”	120”	120”

Optional Horizontal T-Post. See page D6 for additional details.

Note: Double Hung styles have a possible 4 5/8” - 6” of obstructed view where bottom rail meets top rail, depending on rail and horizontal T Post selections.

Note: A Double Hung (DH) panel is considered 2 panels for pricing purposes.

P1IF-L Inverted three sided frame (café style)

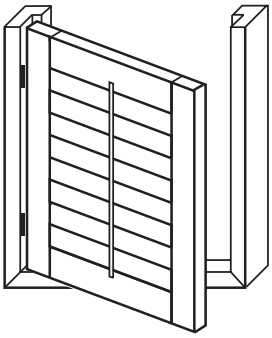

Note: If panel height is to be shorter than the frame, then specify in special instructions, see page B25 for additional details.

Note: See page B20 for Short Panel Availability (under 16” in height) Using 2” Rails. All panels will be made with a 4" top and bottom rails with the exception of 1) Double Hung applications where panel heights are under 36" and 2) Standard application where panels heights are under 36" and 2" rails are requested

P1-R (right hinge) two, three, or four sided frame

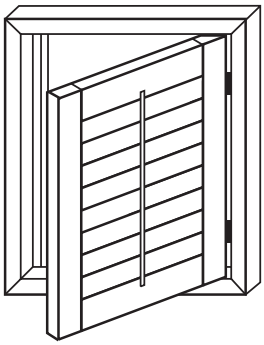

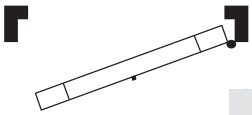

Right Hinge

	2 1/2”	3 1/2”	4 1/2”
• Minimum Width:	6”	6”	6”
• Maximum Width:	36”	36”	36”
• Minimum Height:	16”	16”	16”
• Maximum Height:	120”	120”	120”

Note: Panels less than 18” in height are not recommended, due to the excessive louver overlap that may occur.

P1DH-R Double Hung (right hinge) two, three, or four sided frame

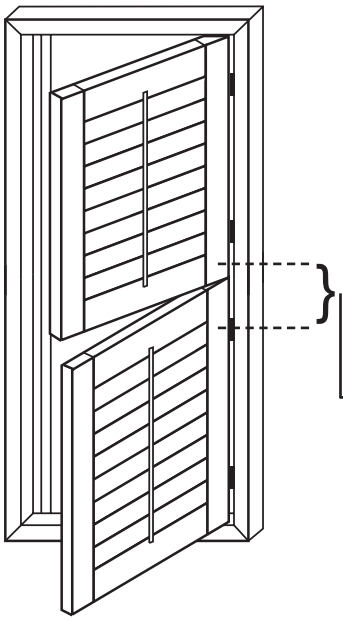

	2 1/2”	3 1/2”	4 1/2”
• Minimum Width:	6”	6”	6”
• Maximum Width:	30”	30”	30”
• Minimum Height:	32”	32”	32”
• Maximum Height:	120”	120”	120”

Optional Horizontal T-Post. See page D6 for additional details.

Note: Double Hung styles have a possible 4 5/8” - 6” of obstructed view where bottom rail meets top rail, depending on rail and horizontal T Post selections.

Note: A Double Hung (DH) panel is considered 2 panels for pricing purposes.

P1IF-R Inverted three sided frame (café style)

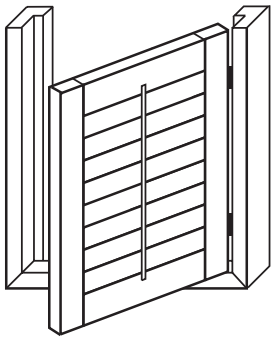

Note: If panel height is to be shorter than the frame, then specify in special instructions, see page B25 for additional details.

Note: See page B20 for Short Panel Availability (under 16” in height) Using 2” Rails. All panels will be made with a 4" top and bottom rails with the exception of 1) Double Hung applications where panel heights are under 36" and 2) Standard application where panels heights are under 36" and 2" rails are requested

Two Panel Shutters

P2-LR two, three, or four sided frame

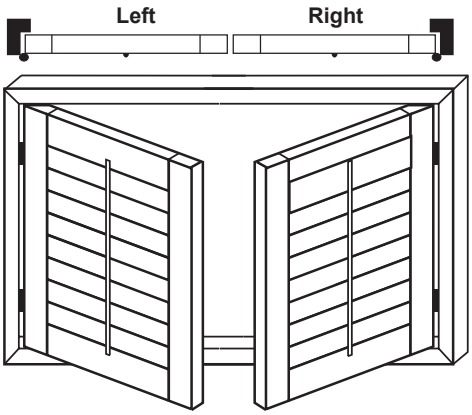

	2 1/2”	3 1/2”	4 1/2”
• Minimum Width:	20”	20”	20”
• Maximum Width:	72”	72”	72”
• Minimum Height:	16”	16”	16”
• Maximum Height:	120”	120”	120”

Note: Panels less than 18” in height are not recommended, due to the excessive louver overlap that may occur.

P2DH-LR Double Hung, two, three, or four sided frame

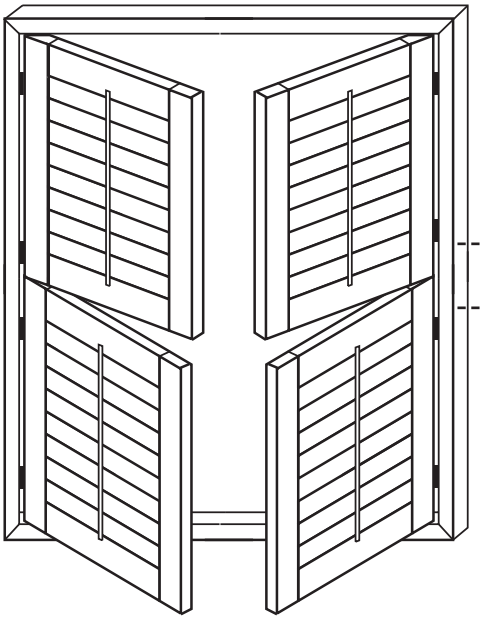

	2 1/2”	3 1/2”	4 1/2”
• Minimum Width:	20”	20”	20”
• Maximum Width:	60”	60”	60”
• Minimum Height:	32”	32”	32”
• Maximum Height:	120”	120”	120”

Optional Horizontal T-Post. See page D6 for additional details.

Note: Double Hung styles have a possible 4 5/8” - 6” of obstructed view where bottom rail meets top rail, depending on rail and horizontal T Post selections.

Note: A Double Hung (DH) panel is considered 2 panels for pricing purposes.

P2IF-LR Inverted, three sided frame (café style)

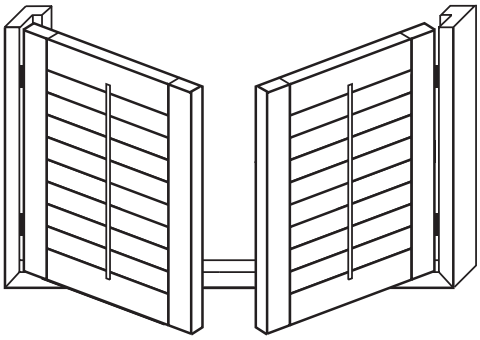

Note: If panel height is to be shorter than the frame, then specify in special instructions, see page B25 for additional details.

Note: See page B20 for Short Panel Availability (under 16” in height) Using 2” Rails. All panels will be made with a 4" top and bottom rails with the exception of 1) Double Hung applications where panel heights are under 36" and 2) Standard application where panels heights are under 36" and 2" rails are requested

P2-LTR two, three, or four sided frame

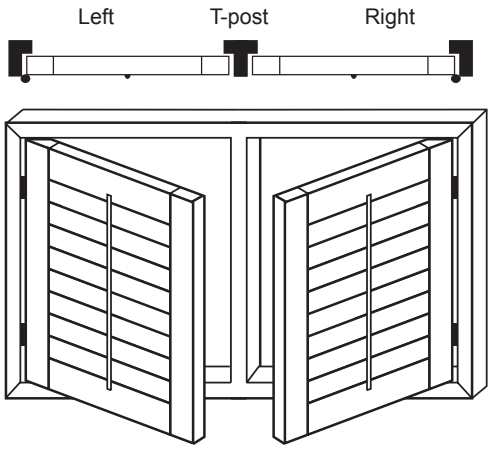

	2 1/2”	3 1/2”	4 1/2”
• Minimum Width:	20”	20”	20”
• Maximum Width:	72”	72”	72”
• Minimum Height:	16”	16”	16”
• Maximum Height:	120”	120”	120”

Note: Panels less than 18” in height are not recommended, due to the excessive louver overlap that may occur.

P2DH-LTR Double Hung, two, three, or four sided frame

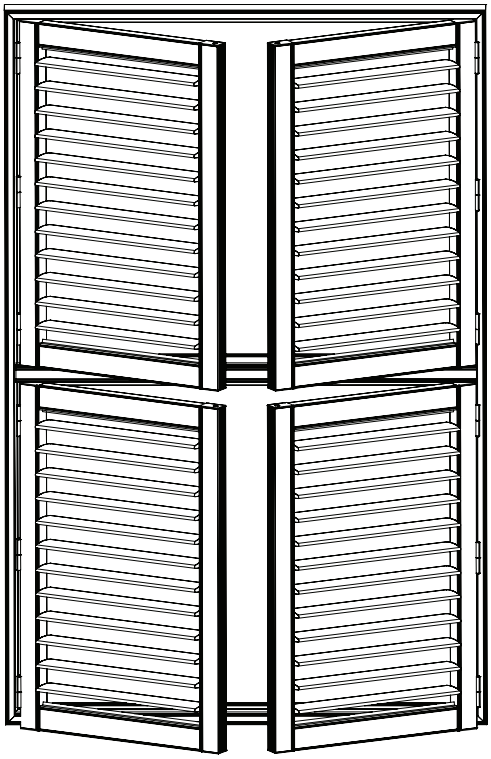

	2 1/2”	3 1/2”	4 1/2”
• Minimum Width:	20”	20”	20”
• Maximum Width:	60”	60”	60”
• Minimum Height:	32”	32”	32”
• Maximum Height:	120”	120”	120”

Note: Double Hung styles have a possible 4 5/8” - 6” of obstructed view where bottom rail meets top rail, depending on rail and horizontal T Post selections.

Note: A Double Hung (DH) panel is considered 2 panels for pricing purposes.

Note: See page B20 for Short Panel Availability (under 16” in height) Using 2” Rails. All panels will be made with a 4" top and bottom rails with the exception of 1) Double Hung applications where panel heights are under 36" and 2) Standard application where panels heights are under 36" and 2" rails are requested

P2-LL Two left bi-fold, two, three, or four sided frame

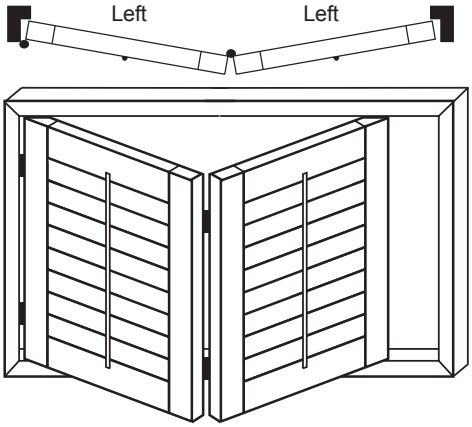

	2 1/2”	3 1/2”	4 1/2”
• Minimum Width:	20”	20”	20”
• Maximum Width:	48”	48”	48”
• Minimum Height:	16”	16”	16”
• Maximum Height:	120”	120”	120”

Note: Panels less than 18” in height are not recommended, due to the excessive louver overlap that may occur.

P2DH-LL Double Hung, two, three, or four sided frame

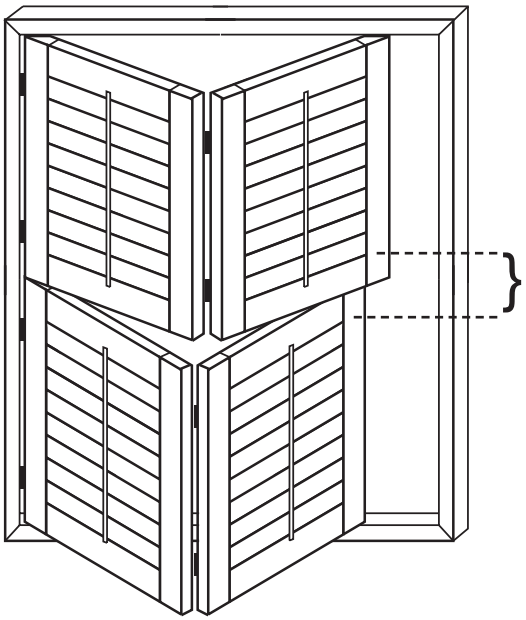

	2 1/2”	3 1/2”	4 1/2”
• Minimum Width:	20”	20”	20”
• Maximum Width:	40”	40”	40”
• Minimum Height:	32”	32”	32”
• Maximum Height:	120”	120”	120”

Optional Horizontal T-Post. See page D6 for additional details.

Note: Double Hung styles have a possible 4 5/8” - 6” of obstructed view where bottom rail meets top rail, depending on rail and horizontal T Post selections.

Note: A Double Hung (DH) panel is considered 2 panels for pricing purposes.

P2IF-LL Inverted, three sided frame (café style)

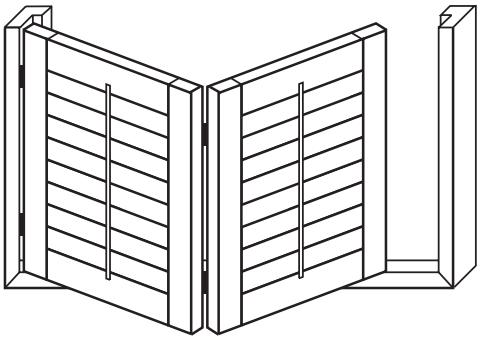

Note: If panel height is to be shorter than the frame, then specify in special instructions, see page B25 for additional details.

Note: See page B20 for Short Panel Availability (under 16” in height) Using 2” Rails. All panels will be made with a 4" top and bottom rails with the exception of 1) Double Hung applications where panel heights are under 36" and 2) Standard application where panels heights are under 36" and 2" rails are requested

Two Panel Shutters

P2-RR Two right bi-fold, two, three, or four sided frame

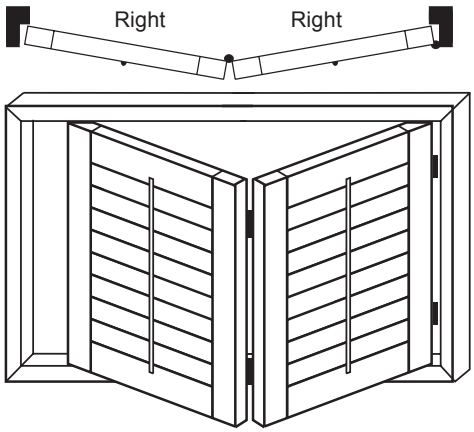

	2 1/2”	3 1/2”	4 1/2”
• Minimum Width:	20”	20”	20”
• Maximum Width:	48”	48”	48”
• Minimum Height:	16”	16”	16”
• Maximum Height:	120”	120”	120”

Note: Panels less than 18” in height are not recommended, due to the excessive louver overlap that may occur.

P2DH-RR Double Hung, two, three, or four sided frame

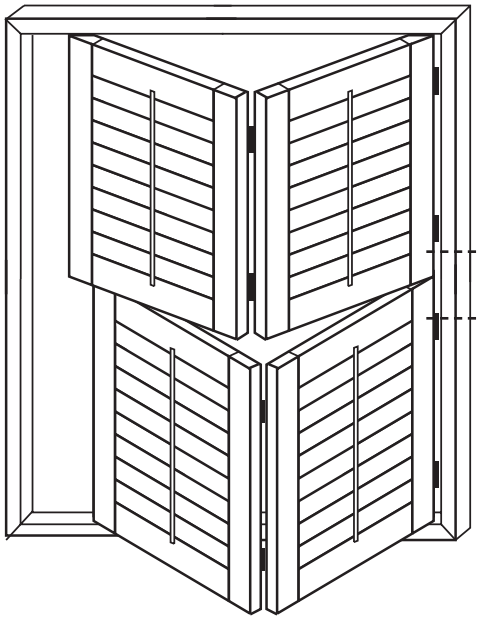

	2 1/2”	3 1/2”	4 1/2”
• Minimum Width:	20”	20”	20”
• Maximum Width:	40”	40”	40”
• Minimum Height:	32”	32”	32”
• Maximum Height:	120”	120”	120”

Optional Horizontal T-Post. See page D6 for additional details.

Note: Double Hung styles have a possible 4 5/8” - 6” of obstructed view where bottom rail meets top rail, depending on rail and horizontal T Post selections.

Note: A Double Hung (DH) panel is considered 2 panels for pricing purposes.

P2IF-RR Inverted, three sided frame (café style)

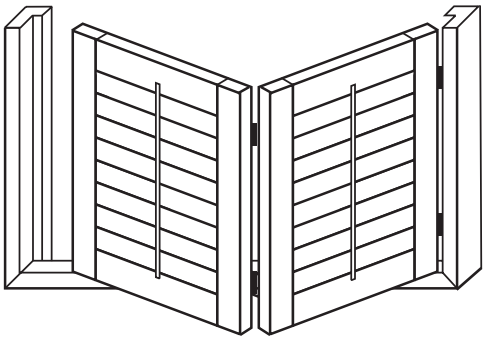

Note: If panel height is to be shorter than the frame, then specify in special instructions, see page B25 for additional details.

Note: See page B20 for Short Panel Availability (under 16” in height) Using 2” Rails. All panels will be made with a 4" top and bottom rails with the exception of 1) Double Hung applications where panel heights are under 36" and 2) Standard application where panels heights are under 36" and 2" rails are requested

P3-LLR two, three, or four sided frame

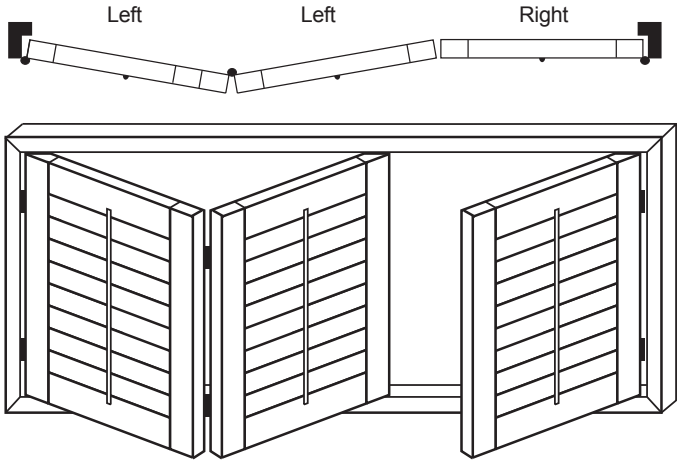

	2 1/2”	3 1/2”	4 1/2”
• Minimum Width:	30”	30”	30”
• Maximum Width:	72”	72”	72”
• Minimum Height:	16”	16”	16”
• Maximum Height:	120”	120”	120”

Note: Panels less than 18” in height are not recommended, due to the excessive louver overlap that may occur.

P3DH-LLR Double Hung, two, three, or four sided frame

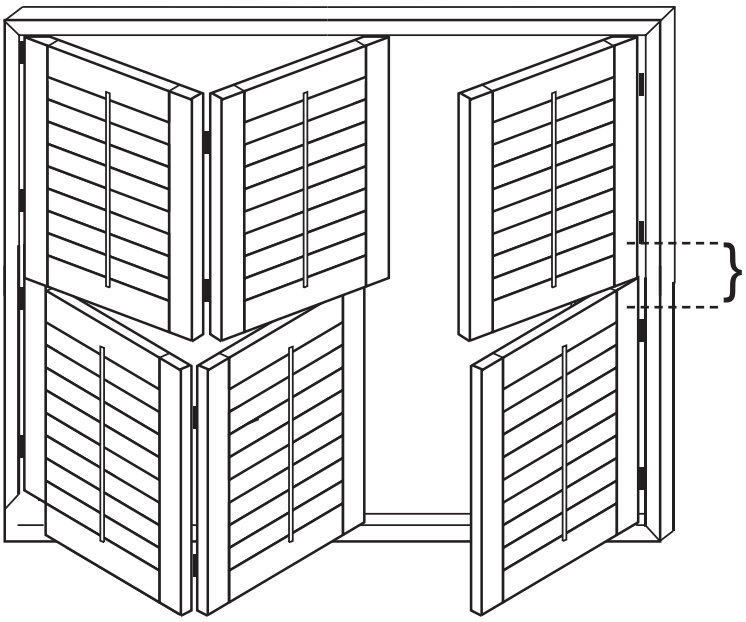

	2 1/2”	3 1/2”	4 1/2”
• Minimum Width:	30”	30”	30”
• Maximum Width:	60”	60”	60”
• Minimum Height:	32”	32”	32”
• Maximum Height:	120”	120”	120”

Optional Horizontal T-Post. See page D6 for additional details.

Note: Double Hung styles have a possible 4 5/8” - 6” of obstructed view where bottom rail meets top rail, depending on rail and horizontal T Post selections.

Note: A Double Hung (DH) panel is considered 2 panels for pricing purposes.

P3IF-LLR Inverted, three sided frame (café style)

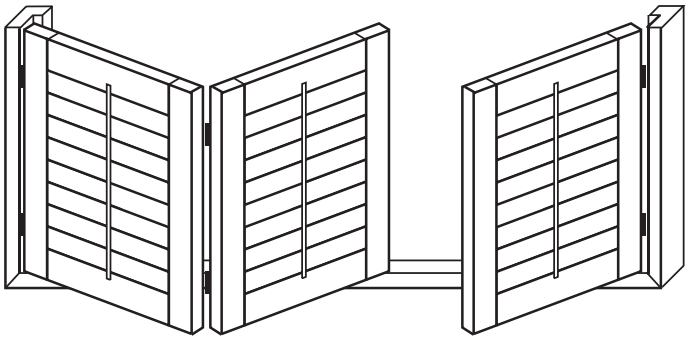

Note: If panel height is to be shorter than the frame, then specify in special instructions, see page B25 for additional details.

Note: See page B20 for Short Panel Availability (under 16” in height) Using 2” Rails. All panels will be made with a 4" top and bottom rails with the exception of 1) Double Hung applications where panel heights are under 36" and 2) Standard application where panels heights are under 36" and 2" rails are requested

P3-LRR two, three, or four sided frame

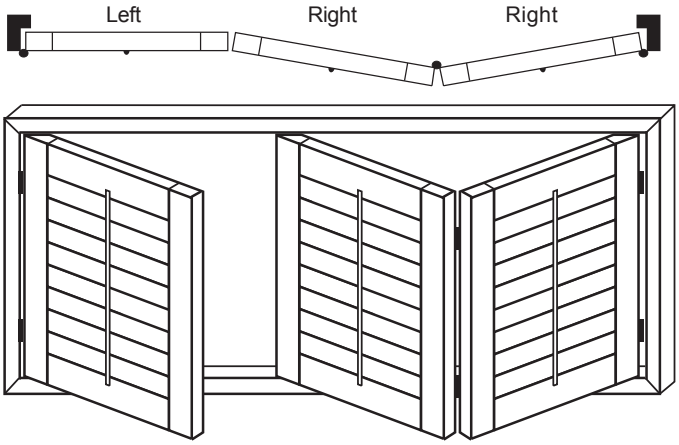

	2 1/2”	3 1/2”	4 1/2”
• Minimum Width:	30”	30”	30”
• Maximum Width:	72”	72”	72”
• Minimum Height:	16”	16”	16”
• Maximum Height:	120”	120”	120”

Note: Panels less than 18” in height are not recommended, due to the excessive louver overlap that may occur.

P3DH-LRR Double Hung, two, three, or four sided frame

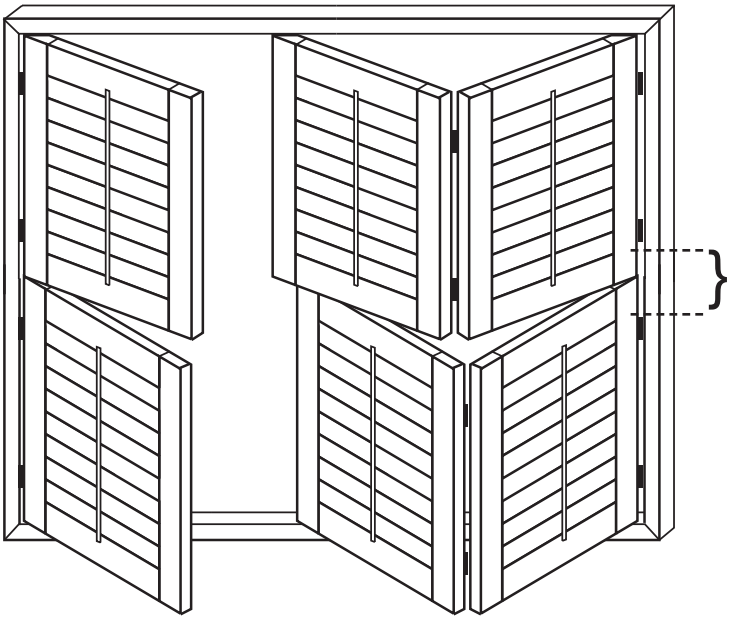

	2 1/2”	3 1/2”	4 1/2”
• Minimum Width:	30”	30”	30”
• Maximum Width:	60”	60”	60”
• Minimum Height:	32”	32”	32”
• Maximum Height:	120”	120”	120”

Optional Horizontal T-Post. See page D6 for additional details.

Note: Double Hung styles have a possible 4 5/8” - 6” of obstructed view where bottom rail meets top rail, depending on rail and horizontal T Post selections.

Note: A Double Hung (DH) panel is considered 2 panels for pricing purposes.

P3IF-LRR Inverted, three sided frame (café style)

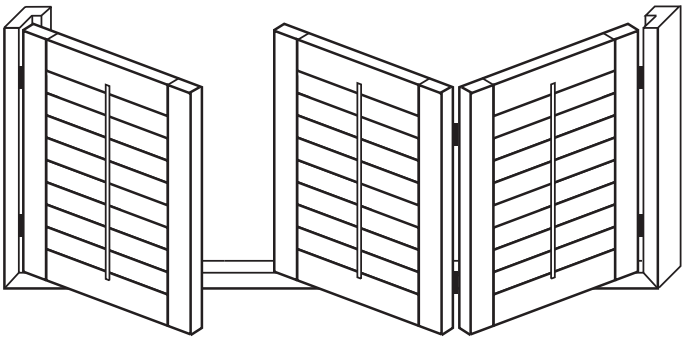

Note: If panel height is to be shorter than the frame, then specify in special instructions, see page B25 for additional details.

Note: See page B20 for Short Panel Availability (under 16” in height) Using 2” Rails. All panels will be made with a 4" top and bottom rails with the exception of 1) Double Hung applications where panel heights are under 36" and 2) Standard application where panels heights are under 36" and 2" rails are requested

P3-LTRTR two, three, or four sided frame

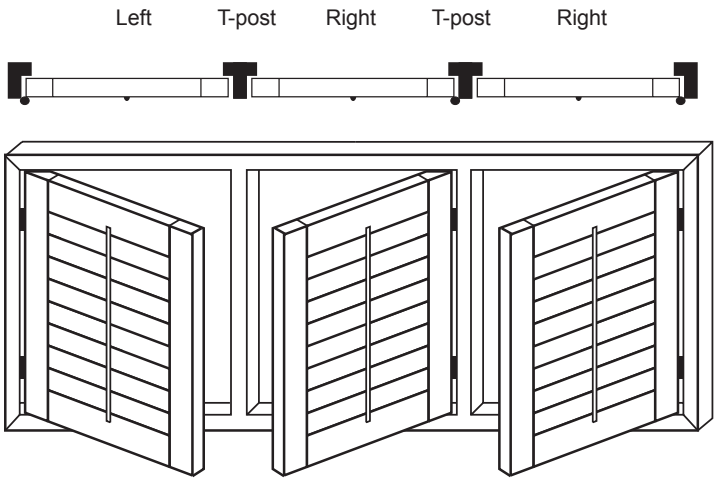

	2 1/2”	3 1/2”	4 1/2”
• Minimum Width:	30”	30”	30”
• Maximum Width:	108”	108”	108”
• Minimum Height:	16”	16”	16”
• Maximum Height:	120”	120”	120”

Note: Panels less than 18” in height are not recommended, due to the excessive louver overlap that may occur.

Note: See page B20 for Short Panel Availability (under 16” in height) Using 2” Rails. All panels will be made with a 4" top and bottom rails with the exception of 1) Double Hung applications where panel heights are under 36" and 2) Standard application where panels heights are under 36" and 2" rails are requested

P3-LTLTR two, three, or four sided frame

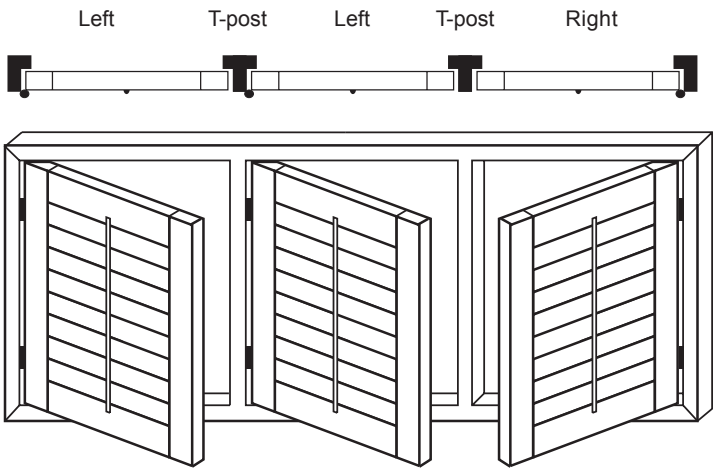

	2 1/2”	3 1/2”	4 1/2”
• Minimum Width:	30”	30”	30”
• Maximum Width:	108”	108”	108”
• Minimum Height:	16”	16”	16”
• Maximum Height:	120”	120”	120”

Note: Panels less than 18” in height are not recommended, due to the excessive louver overlap that may occur.

Note: See page B20 for Short Panel Availability (under 16” in height) Using 2” Rails. All panels will be made with a 4" top and bottom rails with the exception of 1) Double Hung applications where panel heights are under 36" and 2) Standard application where panels heights are under 36" and 2" rails are requested

P4-LLRR two, three, or four sided frame

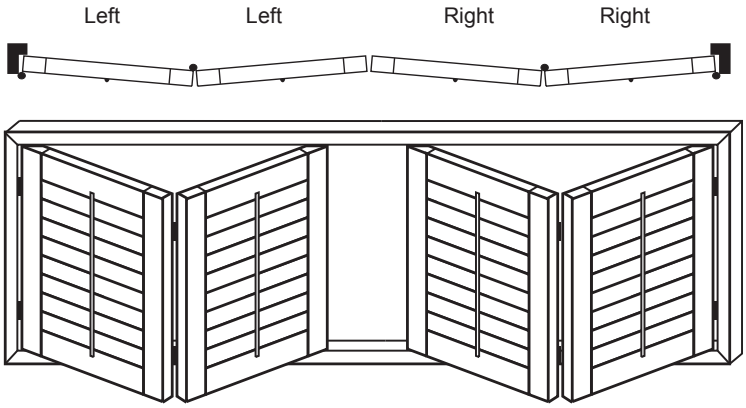

	2 1/2”	3 1/2”	4 1/2”
• Minimum Width:	40”	40”	40”
• Maximum Width:	96”	96”	96”
• Minimum Height:	16”	16”	16”
• Maximum Height:	120”	120”	120”

Note: Panels less than 18” in height are not recommended, due to the excessive louver overlap that may occur.

P4DH-LLRR Double Hung, two, three, or four sided frame

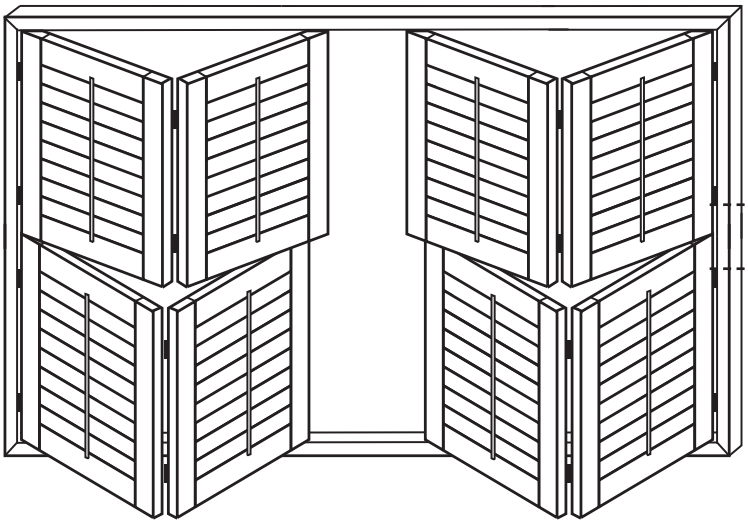

	2 1/2”	3 1/2”	4 1/2”
• Minimum Width:	40”	40”	40”
• Maximum Width:	80”	80”	80”
• Minimum Height:	32”	32”	32”
• Maximum Height:	120”	120”	120”

Optional Horizontal T-Post. See page D6 for additional details.

Note: Double Hung styles have a possible 4 5/8” - 6” of obstructed view where bottom rail meets top rail, depending on rail and horizontal T Post selections.

Note: A Double Hung (DH) panel is considered 2 panels for pricing purposes.

P4IF-LLRR Inverted, three sided frame (café style)

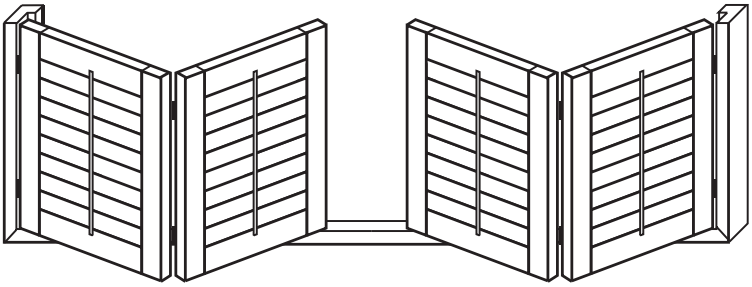

- Minimum Width: 40”
- Maximum Width: 96”

Note: If panel height is to be shorter than the frame, then specify in special instructions, see page B25 for additional details.

Note: See page B20 for Short Panel Availability (under 16” in height) Using 2” Rails. All panels will be made with a 4" top and bottom rails with the exception of 1) Double Hung applications where panel heights are under 36" and 2) Standard application where panels heights are under 36" and 2" rails are requested

P4-LLTRR two, three, or four sided frame

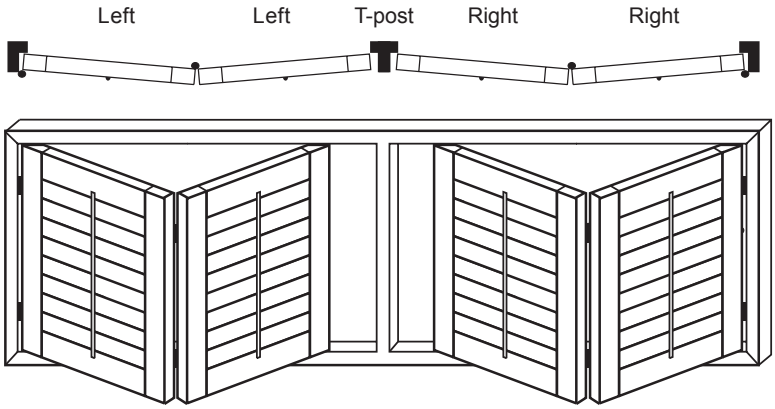

	2 1/2”	3 1/2”	4 1/2”
• Minimum Width:	40”	40”	40”
• Maximum Width:	96”	96”	96”
• Minimum Height:	16”	16”	16”
• Maximum Height:	120”	120”	120”

Note: Panels less than 18” in height are not recommended, due to the excessive louver overlap that may occur.

P4DH-LLTRR Double Hung, two, three, or four sided frame

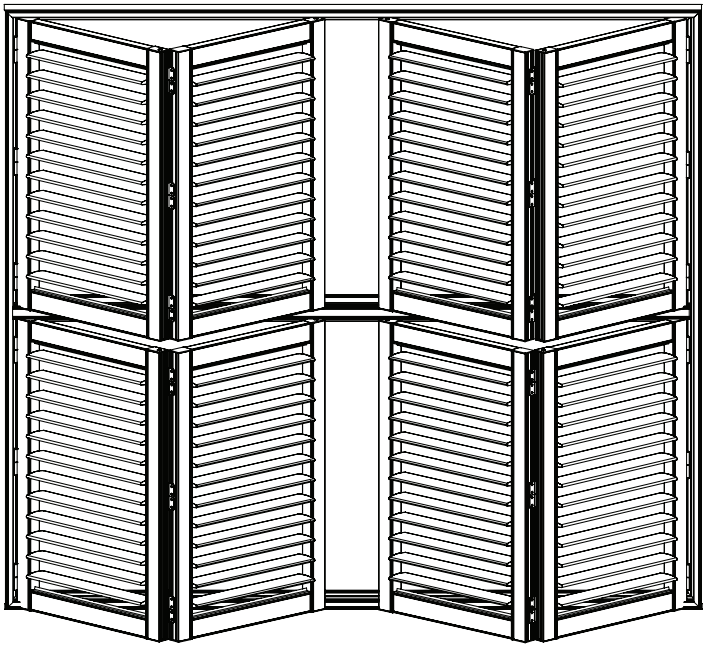

	2 1/2”	3 1/2”	4 1/2”
• Minimum Width:	40”	40”	40”
• Maximum Width:	80”	80”	80”
• Minimum Height:	32”	32”	32”
• Maximum Height:	120”	120”	120”

Note: Double Hung styles have a possible 4 5/8” - 6” of obstructed view where bottom rail meets top rail, depending on rail and horizontal T Post selections.

Note: A Double Hung (DH) panel is considered 2 panels for pricing purposes.

Note: See page B20 for Short Panel Availability (under 16” in height) Using 2” Rails. All panels will be made with a 4" top and bottom rails with the exception of 1) Double Hung applications where panel heights are under 36" and 2) Standard application where panels heights are under 36" and 2" rails are requested

P4-LRTLR two, three, or four sided frame

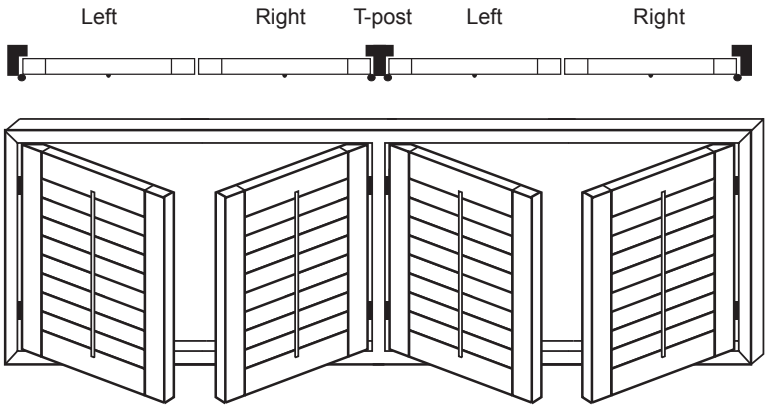

	2 1/2”	3 1/2”	4 1/2”
• Minimum Width:	40”	40”	40”
• Maximum Width:	144”	144”	144”
• Minimum Height:	16”	16”	16”
• Maximum Height:	120”	120”	120”

Note: Panels less than 18” in height are not recommended, due to the excessive louver overlap that may occur.

Note: See page B20 for Short Panel Availability (under 16” in height) Using 2” Rails. All panels will be made with a 4" top and bottom rails with the exception of 1) Double Hung applications where panel heights are under 36" and 2) Standard application where panels heights are under 36" and 2" rails are requested

P4-LTLRTR two, three, or four sided frame

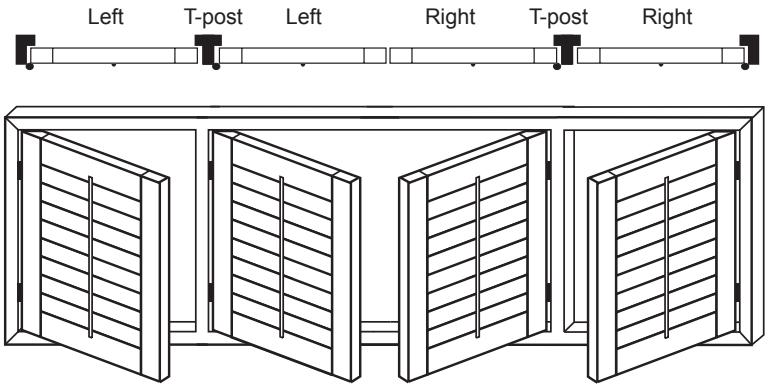

	2 1/2”	3 1/2”	4 1/2”
• Minimum Width:	40”	40”	40”
• Maximum Width:	144”	144”	144”
• Minimum Height:	16”	16”	16”
• Maximum Height:	120”	120”	120”

Note: Panels less than 18” in height are not recommended, due to the excessive louver overlap that may occur.

Note: See page B20 for Short Panel Availability (under 16” in height) Using 2” Rails. All panels will be made with a 4" top and bottom rails with the exception of 1) Double Hung applications where panel heights are under 36" and 2) Standard application where panels heights are under 36" and 2" rails are requested

P4-LTLLTR two, three, or four sided frame

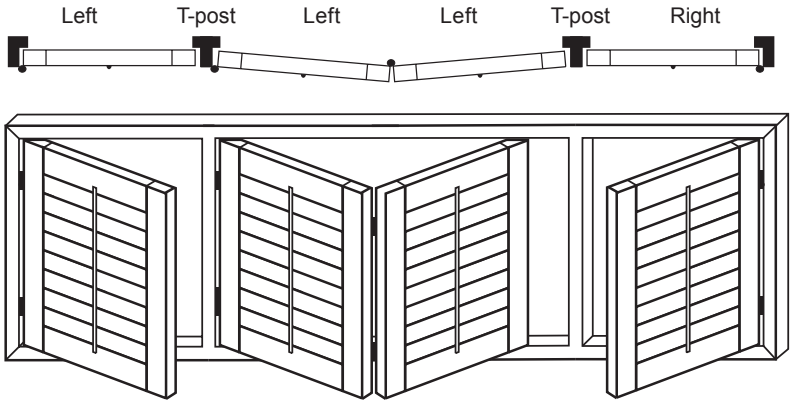

	2 1/2”	3 1/2”	4 1/2”
• Minimum Width:	40”	40”	40”
• Maximum Width:	120”	120	120”
• Minimum Height:	16”	16”	16”
• Maximum Height:	120”	120”	120”

Note: Panels less than 18” in height are not recommended, due to the excessive louver overlap that may occur.

Note: See page B20 for Short Panel Availability (under 16” in height) Using 2” Rails. All panels will be made with a 4" top and bottom rails with the exception of 1) Double Hung applications where panel heights are under 36" and 2) Standard application where panels heights are under 36" and 2" rails are requested

P4-LTRRTR two, three, or four sided frame

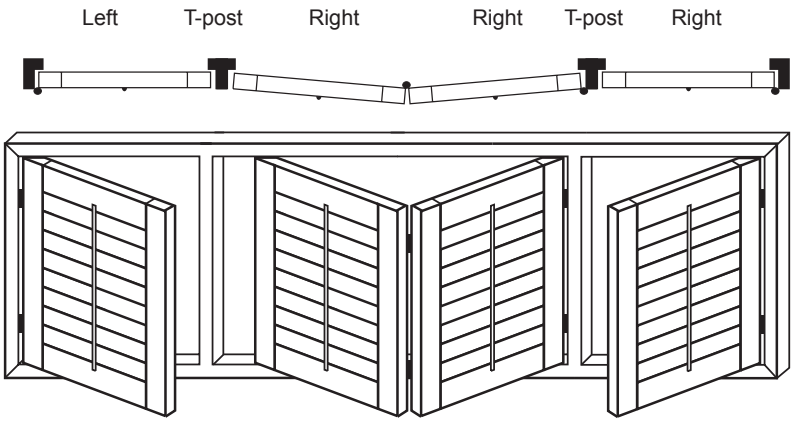

	2 1/2”	3 1/2”	4 1/2”
• Minimum Width:	40”	40”	40”
• Maximum Width:	120”	120”	120”
• Minimum Height:	16”	16”	16”
• Maximum Height:	120”	120”	120”

Note: Panels less than 18” in height are not recommended, due to the excessive louver overlap that may occur.

Note: See page B20 for Short Panel Availability (under 16” in height) Using 2” Rails. All panels will be made with a 4" top and bottom rails with the exception of 1) Double Hung applications where panel heights are under 36" and 2) Standard application where panels heights are under 36" and 2" rails are requested

P6-LRTLRTLR two, three, or four sided frame

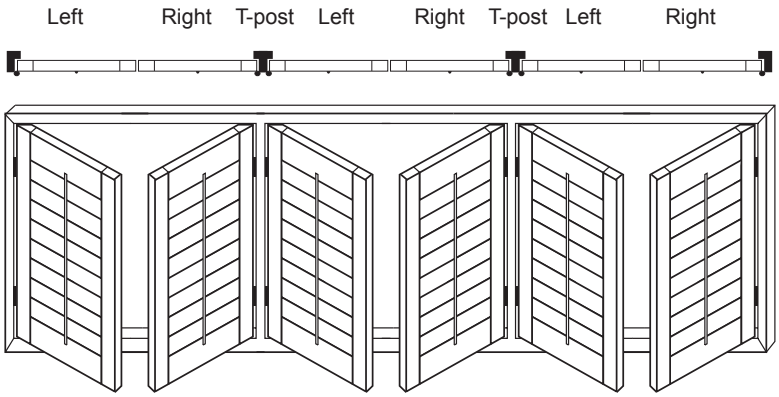

	2 1/2”	3 1/2”	4 1/2”
• Minimum Width:	60”	60”	60”
• Maximum Width:	180”	180”	180”
• Minimum Height:	16”	16”	16”
• Maximum Height:	120”	120”	120”

Note: Panels less than 18” in height are not recommended, due to the excessive louver overlap that may occur.

P6-LRTLRTLR two, three, or four sided frame

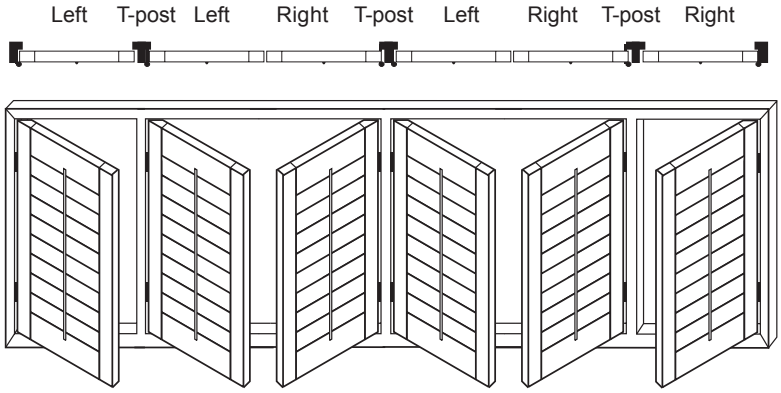

	2 1/2”	3 1/2”	4 1/2”
• Minimum Width:	60”	60”	60”
• Maximum Width:	180”	180”	180”
• Minimum Height:	16”	16”	16”
• Maximum Height:	120”	120”	120”

Note: See page B20 for Short Panel Availability (under 16” in height) Using 2” Rails. All panels will be made with a 4" top and bottom rails with the exception of 1) Double Hung applications where panel heights are under 36" and 2) Standard application where panels heights are under 36" and 2" rails are requested

P6-LTLLRRTR two, three, or four sided frame

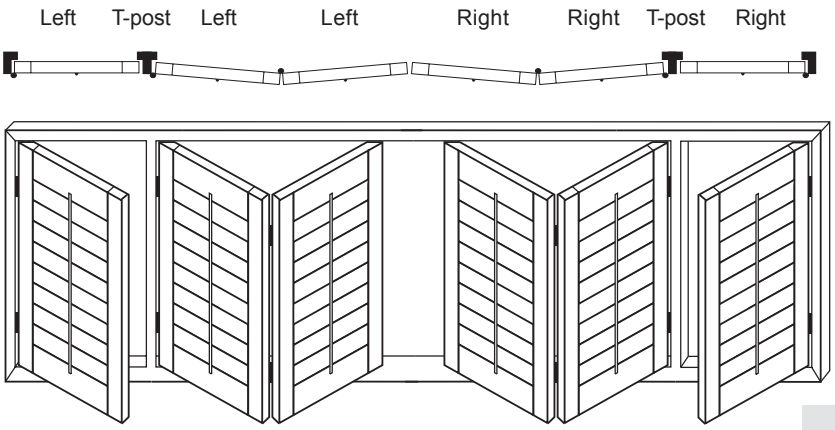

Note: Panels less than 18” in height are not recommended, due to the excessive louver overlap that may occur.

	2 1/2”	3 1/2”	4 1/2”
• Minimum Width:	60”	60”	60”
• Maximum Width:	168”	168”	168”
• Minimum Height:	16”	16”	16”
• Maximum Height:	120”	120”	120”

P6-LTLLTRRTR two, three, or four sided frame

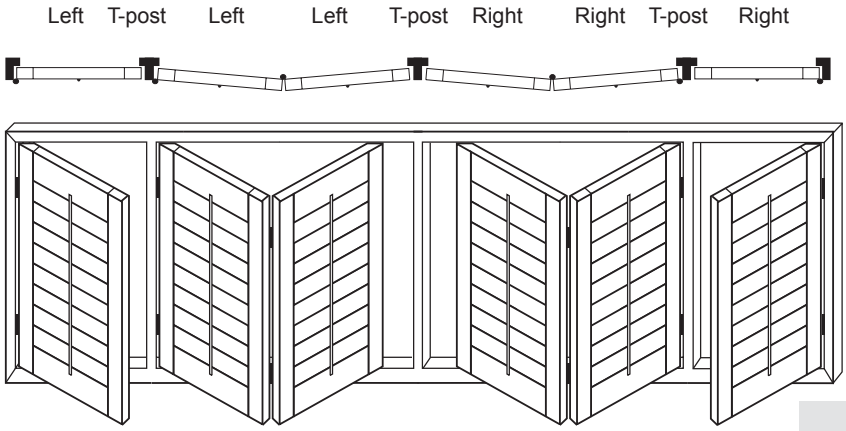

	2 1/2”	3 1/2”	4 1/2”
• Minimum Width:	60”	60”	60”
• Maximum Width:	168”	168”	168”
• Minimum Height:	16”	16”	16”
• Maximum Height:	120”	120”	120”

Note: See page B20 for Short Panel Availability (under 16” in height) Using 2” Rails. All panels will be made with a 4" top and bottom rails with the exception of 1) Double Hung applications where panel heights are under 36" and 2) Standard application where panels heights are under 36" and 2" rails are requested

P6-LLTLLTRR two, three, or four sided frame

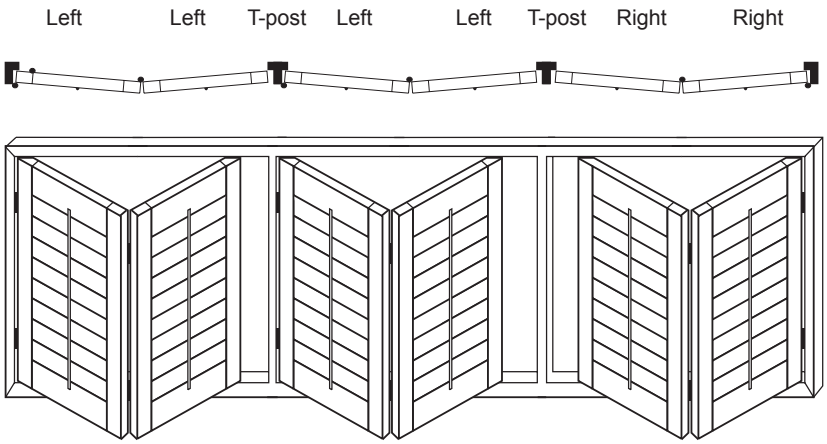

	2 1/2”	3 1/2”	4 1/2”
• Minimum Width:	60”	60”	60”
• Maximum Width:	144”	144”	144”
• Minimum Height:	16”	16”	16”
• Maximum Height:	120”	120”	120”

Note: Panels less than 18” in height are not recommended, due to the excessive louver overlap that may occur. See section F for motorization specifications.

P6-LLTRRTRR two, three, or four sided frame

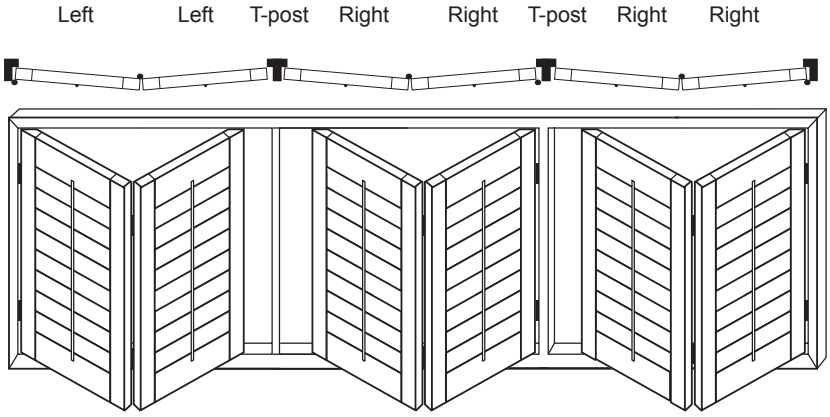

	2 1/2”	3 1/2”	4 1/2”
• Minimum Width:	60”	60”	60”
• Maximum Width:	144”	144”	144”
• Minimum Height:	16”	16”	16”
• Maximum Height:	120”	120”	120”

P6-LLRTLRR two, three, or four sided frame

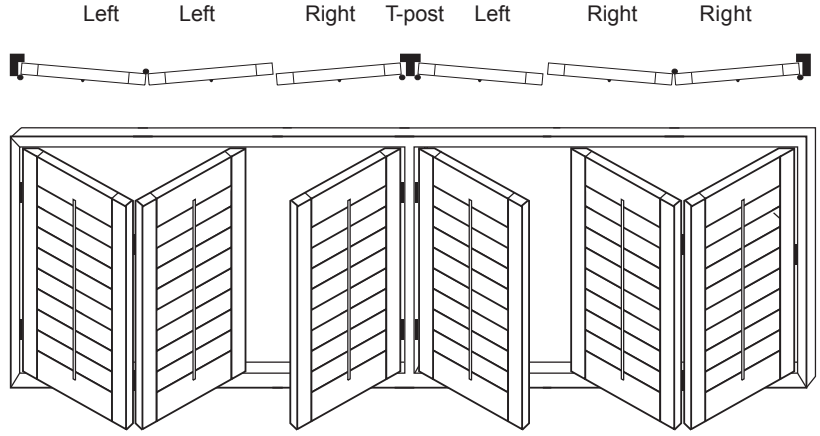

	2 1/2”	3 1/2”	4 1/2”
• Minimum Width:	60”	60”	60”
• Maximum Width:	144”	144”	144”
• Minimum Height:	16”	16”	16”
• Maximum Height:	120”	120”	120”

Note: Panels less than 18” in height are not recommended, due to the excessive louver overlap that may occur. See section F for motorization specifications.

“Short Panel” available heights using 2" Rails

In order for short panels to function properly and look appealing, there must be a reasonable amount of louver overlap. A "no frame" or "4 sided frame" application is only applicable to the chart below. It will not be possible to enter or produce any short panel order height that is not listed. Calculations for short panels are available for all operating systems, but are not recommended for tilt bars with two louvers.

FRAME TYPE	Sill frames for Z, DT, BZ, T	Z or DT	Z or DT with one Top or Bottom sill	BZ or Trim	BZ or T with one Top or Bottom sill	L or Casing sill or S sill
	Ordered Height (IM - Inside Mount)	Ordered Height (IM - Inside Mount)	Ordered Height (IM - Inside Mount)	Ordered Height (IM - Inside Mount)	Ordered Height (IM - Inside Mount)	Ordered Height (IM - Inside Mount)
2 1/2 - 2 Louvers	9 7/8" - 10 3/8"	10" - 10 1/4"	10" - 10 1/4"	10 1/8"- 10 3/8"	10 "- 10 1/4"	10 3/8" - 10 5/8"
3 1/2 - 2 Louvers	**11 5/8" - 12 3/8"**	**11 3/4" - 12 1/4"**	**11 3/4" - 12 1/4"**	**11 7/8" - 12 3/8"**	**11 3/4" - 12 1/4"**	**12 1/8" - 12 5/8"**
4 1/2 - 2 Louvers	13 1/2" - 14 3/8"	13 5/8" - 14 1/4"	13 5/8" - 14 1/4"	13 3/4" - 14 3/8"	13 5/8" - 14 1/4"	14" - 14 5/8"
2 1/2 - 3 Louvers	11 5/8" - 12 1/4"	11 3/4" - 12 3/8"	11 3/4" - 12 3/8"	11 7/8" - 12 1/2"	11 5/8" - 12 3/8"	12 1/8" - 12 3/4"
3 1/2 - 3 Louvers	**14 1/8" - 15 1/4"**	**14 1/4" - 15 3/8"**	**14 1/4" - 15 3/8"**	**14 3/8" - 15 1/2"**	**14 1/4" - 15 3/8"**	**14 5/8" - 15 3/4"**
4 1/2 - 3 Louvers	16 7/8" - 18 1/4"	17" - 18 3/8"	17" - 18 3/8"	17 1/8" - 18 1/2"	17" - 18 3/8"	17 3/8" - 18 3/4"
2 1/2 - 4 Louvers	13 1/4" - 14 3/8"	13 3/8" - 14 1/2"	13 3/8" - 14 1/2"	13 1/2" - 14 5/8"	13 3/8" - 14 1/2"	13 3/4" - 14 7/8"
3 1/2 - 4 Louvers	**16 5/8" - 18 3/8"**	**16 3/4" - 18 1/2"**	**16 3/4" - 18 1/2"**	**16 7/8" - 18 5/8"**	**16 3/4" - 18 1/2"**	**17 1/8" - 17 7/8"**
4 1/2 - 4 Louvers	20 1/4" - 22 3/8"	20 3/8" - 22 1/2"	20 3/8" - 22 1/2"	20 1/2" - 22 5/8"	20 3/8" - 22 1/2"	20 3/4" - 22 7/8"
2 1/2 - 5 Louvers	15 1/8" - 16 1/2"	15 1/4" - 16 5/8"	15 1/8" - 16 5/8"	15 3/8" - 16 3/4"	15 3/8" - 16 5/8"	15 5/8" - 17"
3 1/2 - 5 Louvers	**19 1/8" - 21 1/2'**	**19 1/4" - 21 5/8"**	**19 1/4" - 21 5/8"**	**19 3/8" - 21 3/4"**	**19 1/4" - 21 5/8"**	**19 5/8" - 22"**
4 1/2 - 5 Louvers	23 5/8" - 26 1/2"	23 3/4" - 26 5/8"	23 11/16" - 26 5/8"	23 7/8" - 26 3/4"	24 7/8" - 26 5/8"	24 1/8" - 27"

FRAME TYPE	NO FRAME	L or Casing Sill or S sill	Casing	Casing with one top or bottom sill	S Frame	S frame with one Top or Bottom Sil
	Ordered Height (IM - Inside Mount)	Ordered Height (OM - Outside Mount)	Ordered Height (OM - Outside Mount)	Ordered Height (OM - Outside Mount)	Ordered Height (OM - Outside Mount)	Ordered Height (OM - Outside Mount)
2 1/2 - 2 Louvers	8 3/4"- 9 "	10 1/4" - 10 1/2"	13" - 13 1/4"	11 5/8" - 11 7/8"	11 5/8" - 11 7/8"	11" - 11 1/4"
3 1/2 - 2 Louvers	**10 1/2" - 11"**	**12" - 12 1/2"**	**14 3/4" -15 1/4"**	**13 3/8" - 13 7/8"**	**13 3/8" - 13 7/8"**	**12 3/4" - 13 1/4"**
4 1/2 - 2 Louvers	12 3/8" - 13"	13 7/8" - 14 1/2"	16 5/8" - 17 1/4"	15 1/4 - 15 7/8"	15 1/4 - 15 7/8"	14 5/8" - 15 1/4"
2 1/2 - 3 Louvers	10 1/2" - 11 1/8"	12" - 12 5/8"	14 3/4" - 15 3/8"	13 3/8" - 14"	13 3/8" - 14"	12 3/4" - 13 3/8"
3 1/2 - 3 Louvers	**13" - 14 1/8"**	**14 1/2" - 15 5/8"**	**17 1/4" - 18 3/8"**	**15 7/8" - 17"**	**15 7/8" - 17"**	**15 1/4" - 16 3/8"**
4 1/2 - 3 Louvers	15 3/4" - 17 1/8"	17 1/4" - 18 5/8"	20" - 21 3/8"	18 5/8" - 20"	18 5/8" - 20"	18" - 19 3/8"
2 1/2 - 4 Louvers	12 1/4" - 13 1/4"	13 5/8" - 14 3/4"	16 1/4" - 17 1/2"	14 7/8" - 16 1/8"	14 7/8" - 16 1/8"	14 1/4" - 15 1/2"
3 1/2 - 4 Louvers	**15 1/2" - 17 1/4"**	**17" - 18 3/4"**	**19 3/4" - 21 1/2"**	**18 3/8" - 20 1/8"**	**18 3/8" - 20 1/8"**	**17 3/4" - 19 1/2"**
4 1/2 - 4 Louvers	19 1/8" - 21 1/4"	20 5/8" - 22 3/4"	23 3/8" - 25 1/2"	22" - 24 1/8"	22" - 24 1/8"	21 3/8" - 23 1/2"
2 1/2 - 5 Louvers	14" - 15 3/8"	15 1/2" - 16 7/8"	18 1/2"-19 5/8"	16 7/8" - 18 1/4"	16 7/8" - 18 1/4"	16 1/4" - 17 5/8"
3 1/2 - 5 Louvers	**18 " - 20 3/8"**	**19 1/2"- 21 7/8"**	**22 1/4" - 24 5/8"**	**20 5/8" - 23 1/4"**	**20 5/8" - 23 1/4"**	**20 " - 22 5/8"**
4 1/2 - 5 Louvers	22 1/2" - 25 3/8"	24" - 26 7/8"	26 3/4"- 29 5/8"	25 3/8" - 28 1/4"	25 3/8" - 28 1/4"	24 3/4" - 27 5/8"

P4D-LLRR three sided frame

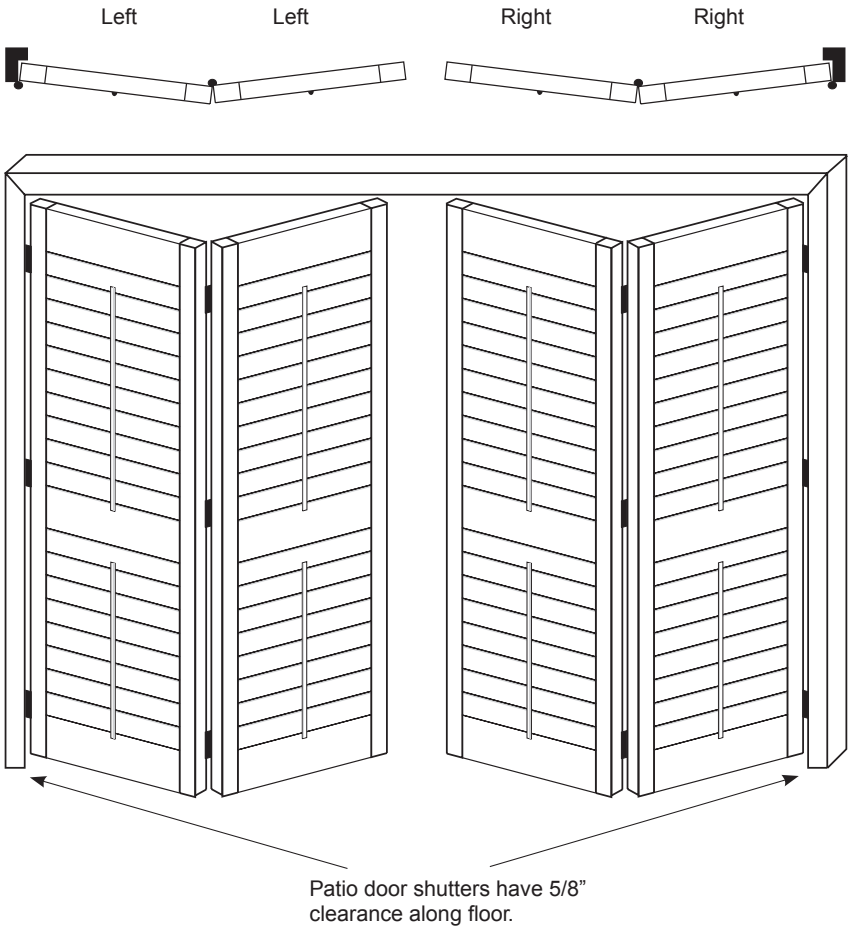

	2 1/2”	3 1/2”	4 1/2”
• Minimum Width:	40”	40”	40”
• Maximum Width:	96”	96”	96”
• Minimum Height:	16”	16”	16”
• Maximum Height:	120”	120”	120”

Note: Panels less than 18” in height are not recommended, due to the excessive louver overlap that may occur.

Note: For applications over 50 square feet, see our By-Pass (Section H & I) and Bi-Fold (Section J) shutters. Aluminum inserts are added to all patio door shutters. All panels over 96” in height require two divider rails.

Note: Panel drop and panel flair may occur in three sided frame applications. For best results, a four sided frame with a Sill Frame is recommended.

Alternatively, a small piece of Z-Sill Frame can be ordered and mounted to the floor where the panels meet to aid in supporting the panels. Order a 4" piece of Z-Sill frame and Z Sill Frame Caps.

P4BY-LTLLTR with compound mitered 3 or 4 sided frame

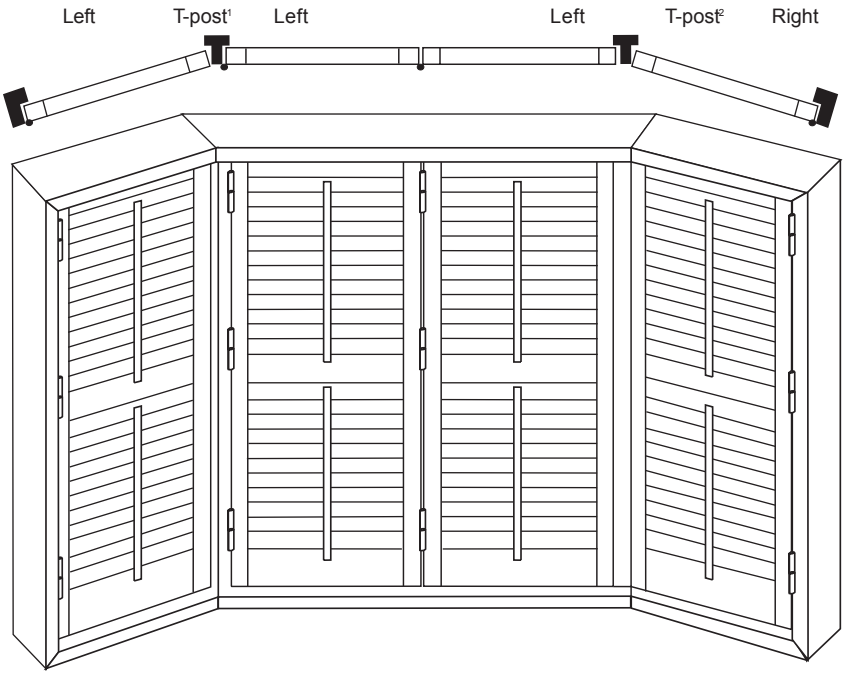

	2 1/2”	3 1/2”	4 1/2”
• Minimum Width:	40”	40”	40”
• Maximum Width:	108”	108”	108”
• Minimum Height:	16”	16”	16”
• Maximum Height:	120”	120”	120”

Note: Panels less than 18” in height are not recommended, due to the excessive louver overlap that may occur.

P4BY-LTRRTR with compound mitered 3 or 4 sided frame

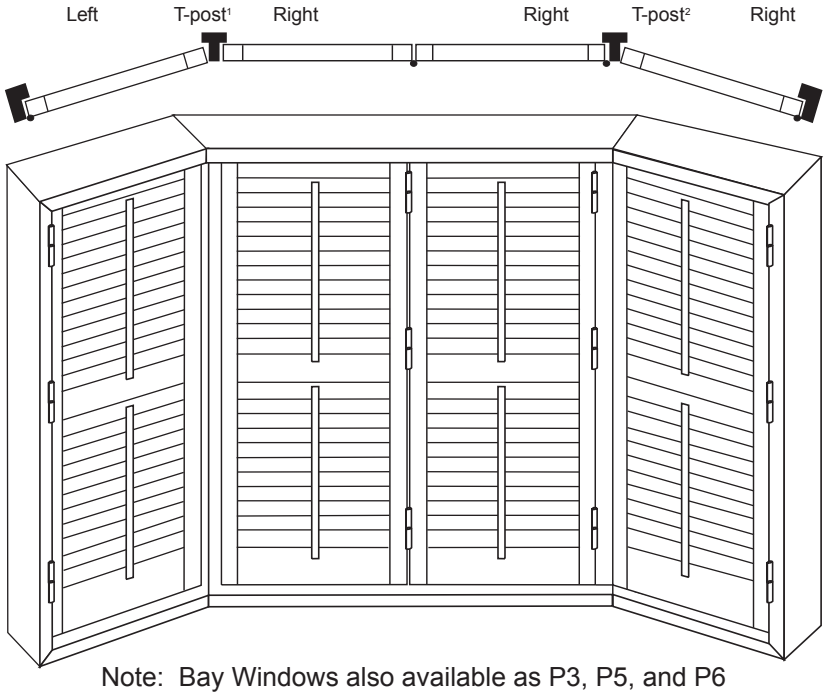

	2 1/2”	3 1/2”	4 1/2”
• Minimum Width:	40”	40”	40”
• Maximum Width:	108”	108”	108”
• Minimum Height:	16”	16”	16”
• Maximum Height:	120”	120”	120”

Note: Bay Windows also available as P3, P5, and P6

P4BY-LTLRTR with compound mitered 3 or 4 sided frame

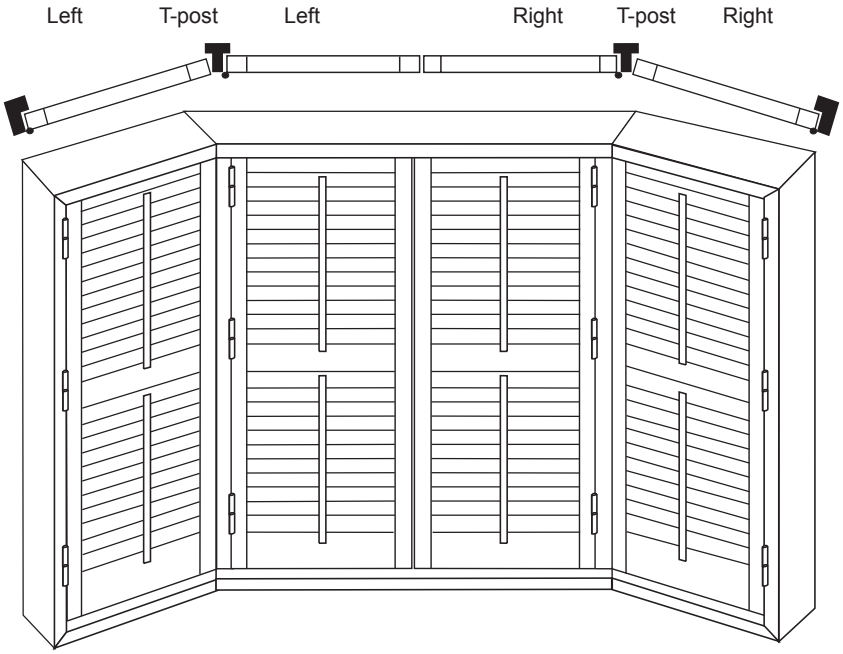

	2 1/2”	3 1/2”	4 1/2”
• Minimum Width:	40”	40”	40”
• Maximum Width:	144”	144”	144”
• Minimum Height:	16”	16”	16”
• Maximum Height:	120”	120”	120”

Note: Panels less than 18” in height are not recommended, due to the excessive louver overlap that may occur.

P4BY-LLRR/Inverted Hinge with compound mitered 3 or 4 sided frame

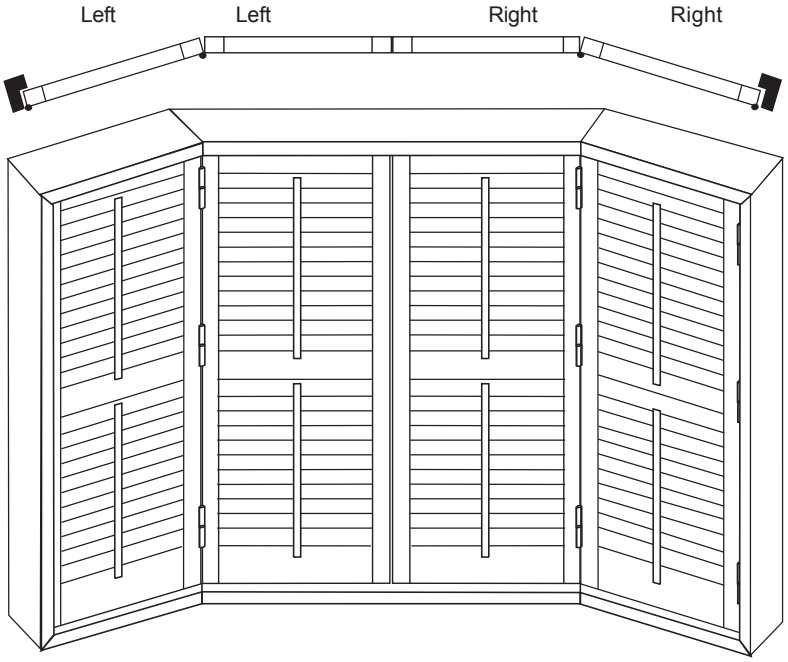

	2 1/2”	3 1/2”	4 1/2”
• Minimum Width:	40”	40”	40”
• Maximum Width:	96”	96”	96”
• Minimum Height:	16”	16”	16”
• Maximum Height:	120”	120”	120”

Note: Bay Windows also available as P3, P5, and P6

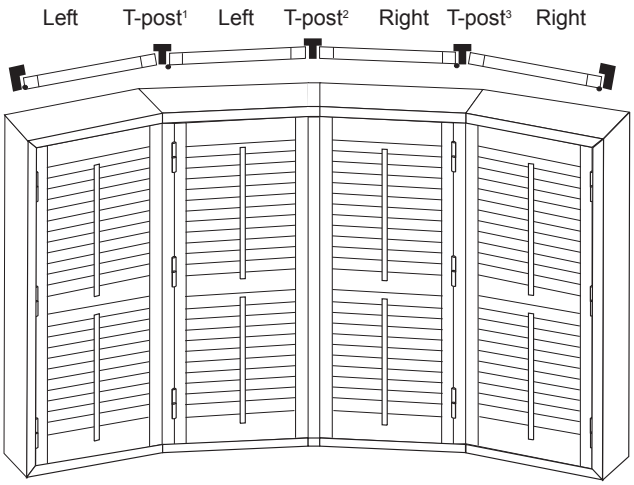

P4BW-LTLTRTR

with compound mitered 3 or 4 sided frame

	2 1/2”	3 1/2”	4 1/2”
• Minimum Width:	40”	40”	40”
• Maximum Width:	144”	144”	144”
• Minimum Height:	16”	16”	16”
• Maximum Height:	120”	120”	120”

Note: Panels less than 18” in height are not recommended, due to the excessive louver overlap that may occur.

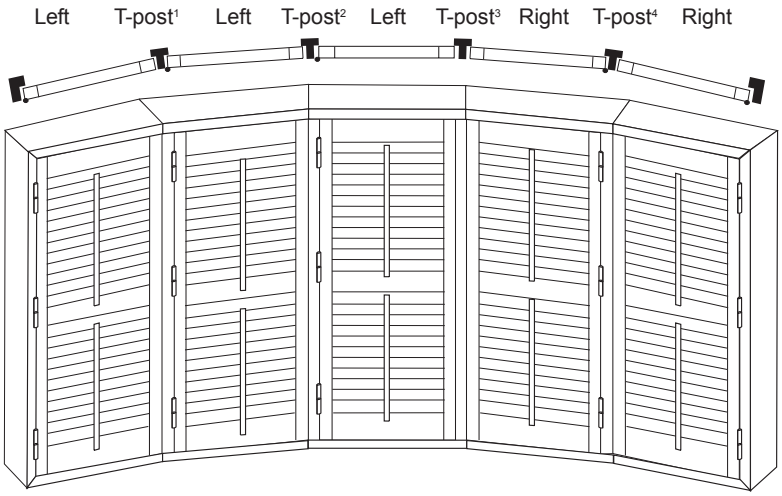

P5BW-LTLTLTRTR

with compound mitered 3 or 4 sided frame

	2 1/2”	3 1/2”	4 1/2”
• Minimum Width:	50”	50”	50”
• Maximum Width:	180”	180”	180”
• Minimum Height:	16”	16”	16”
• Maximum Height:	120”	120”	120”

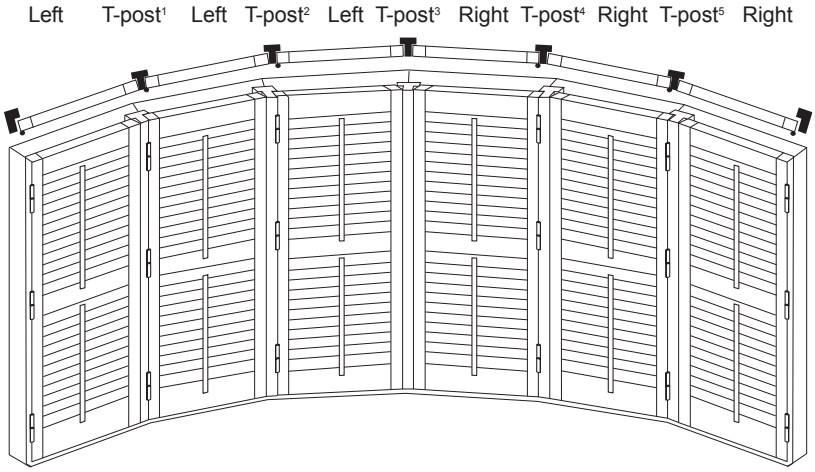

P6BW-LTLTLTRTRTR

with compound mitered 3 or 4 sided frame

	2 1/2”	3 1/2”	4 1/2”
• Minimum Width:	60”	60”	60”
• Maximum Width:	216”	216”	216”
• Minimum Height:	16”	16”	16”
• Maximum Height:	120”	120”	120”

Note: If Interlock is required, note request on Order Form.

Café Style

A Café style shutter is a shutter configuration in which the panel or panels do not completely cover the entire height of the window opening. The frame may be ordered to the same height as the panel (in 2 or 3 sided frame configurations) or the frame may be ordered at a different height than the panel (4 sided configurations). In a 4 sided Café Style configuration, please note the ordered height and width on the Regular Order Form. Under the remarks section of the order form, note the height of the panel.

If ordering a 3-sided inverted frame in which the panel and frame are the same height, then order as an "IF". (Example: P2IF, page B5)

P1-L (Shown Below)

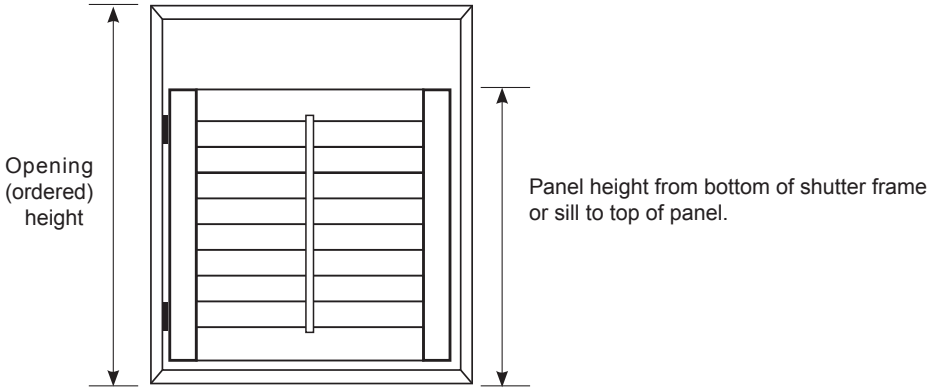

For outside mount, panel height is the measurement from the bottom of the frame to the top of the panel.

C

OPERATING AND DEPTH CLEARANCE

Clearance Charts do not take into consideration any obstructions including cranks, latches, muntin bars, mullions or windows that tilt in. Always recommended to use frame and panel to confirm clearance.

Inside Mount with No Frame (direct mount)

Depth Clearance

With Rear Tilt	With Tilt Bar or Gear
2 1/2” Louver = 2 7/16”	2 1/2” Louver = 1 7/8”
3 1/2” Louver = 2 15/16”	3 1/2” Louver = 2 3/8”
4 1/2” Louver = 3 7/16”	4 1/2” Louver = 2 7/8”

Note: With optional 1 1/4” extended leaf hinges, the depth clearance for shutters with tilt bar can be reduced by 5/8” to 1 1/4” for 2 1/2” louver, 1 3/4” for 3 1/2” louver, and 2 1/4” for 4 1/2” louver.

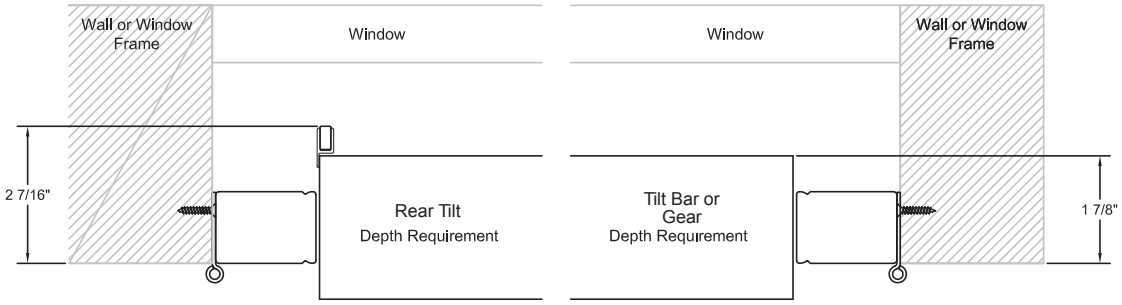

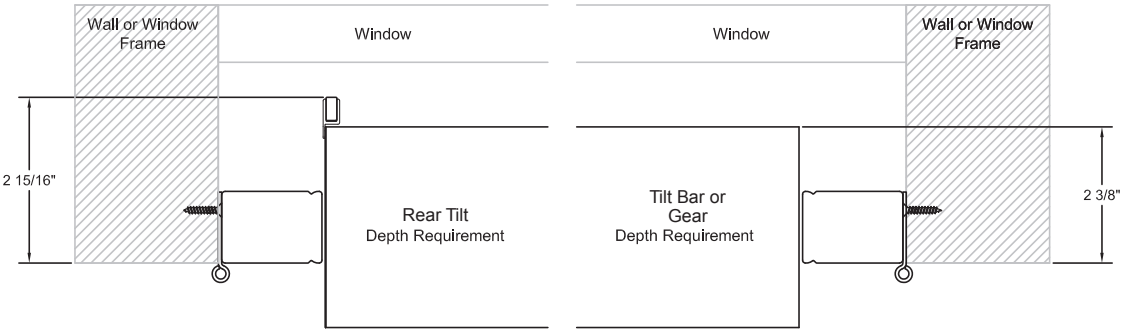

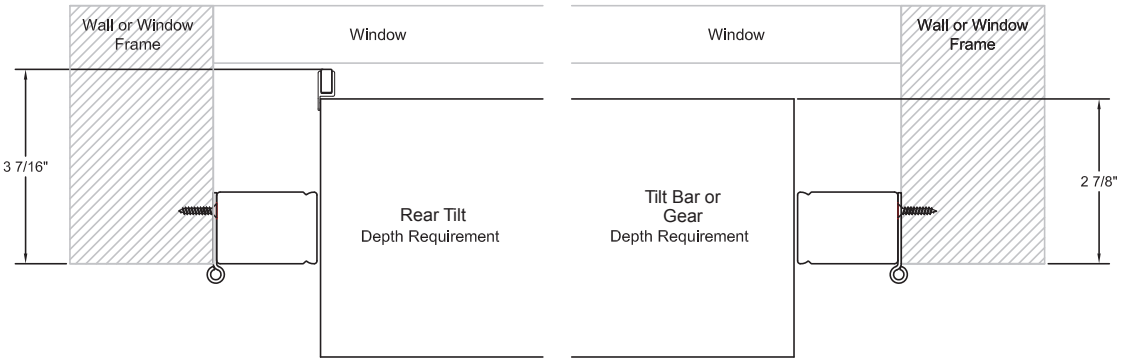

Clearance Charts do not take into consideration any obstructions including cranks, latches, muntin bars, mullions or windows that tilt in. Always recommended to use frame and panel to confirm clearance.

Inside Mount with 3/4” x 3/4” Mounting Strip and Bent-leaf Hinge

Depth Clearance

With Rear Tilt	With Tilt Bar or Gear
2 1/2” Louver = 2 7/16”	2 1/2” Louver = 2 1/8”
3 1/2” Louver = 2 15/16”	3 1/2” Louver = 2 3/8”
4 1/2” Louver = 3 7/16”	4 1/2” Louver = 2 7/8”

Note: Depth clearance can be reduced to 1” if mounting strip is installed closer to the inside of opening. However, hinges will project into the room by 1”.

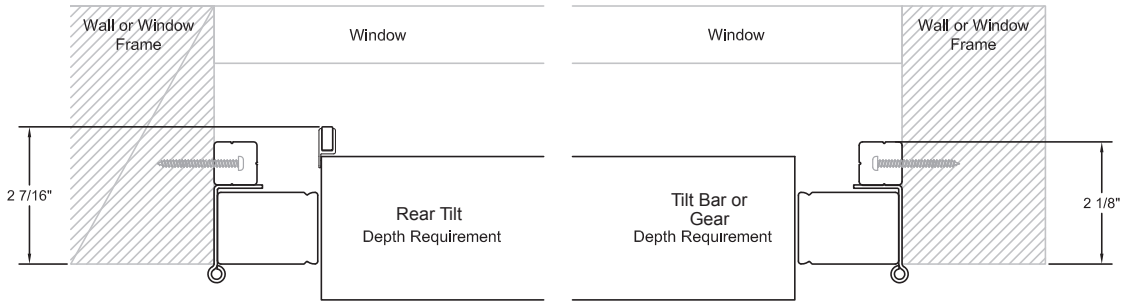

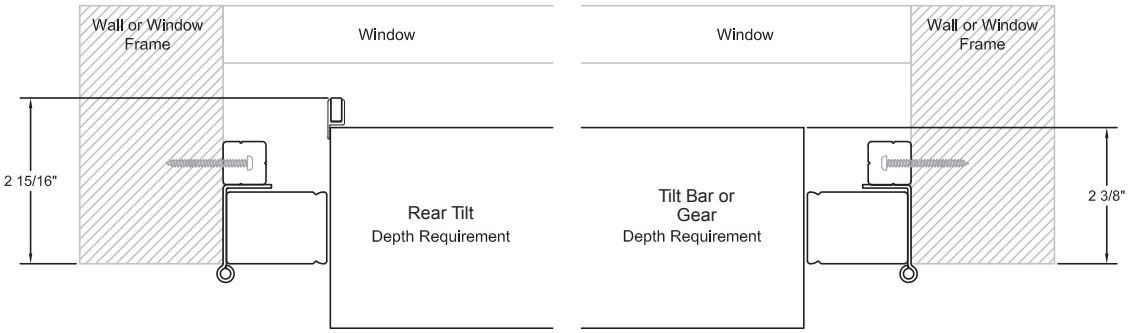

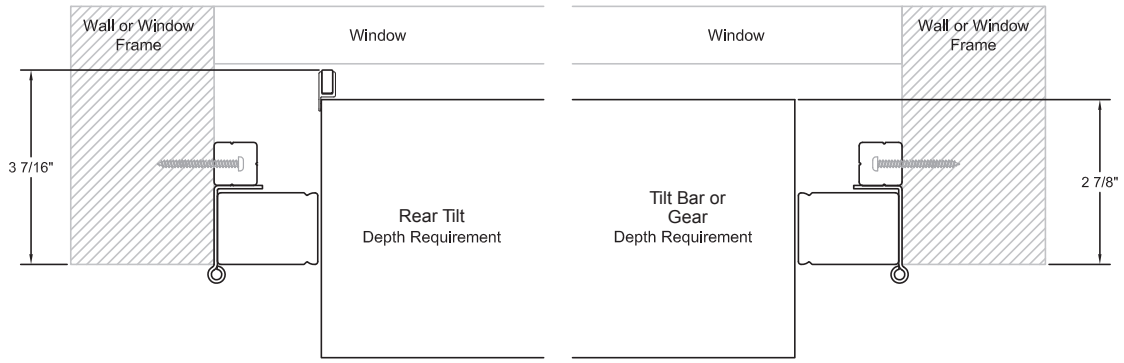

Clearance Charts do not take into consideration any obstructions including cranks, latches, muntin bars, mullions or windows that tilt in. Always recommended to use frame and panel to confirm clearance.

Recessed Inside Mount with L-Frame

Depth Clearance

With Rear Tilt	With Tilt Bar or Gear
2 1/2” Louver = 2 7/16”	2 1/2” Louver = 2 1/8”
3 1/2” Louver = 2 15/16”	3 1/2” Louver = 2 3/8”
4 1/2” Louver = 3 7/16”	4 1/2” Louver = 2 7/8”

Note: For recessed mounts the depth clearance is measured from the front of L-Frame. Only L-Frame can be used in a recessed mount application. Recessed distance can vary.

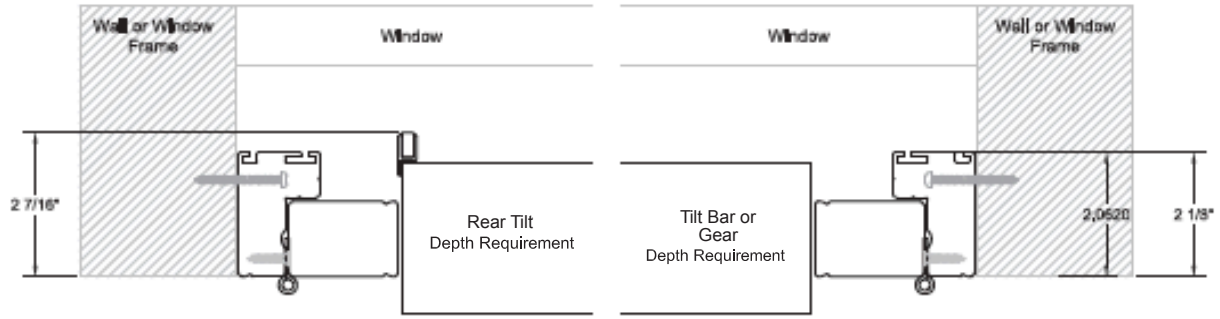

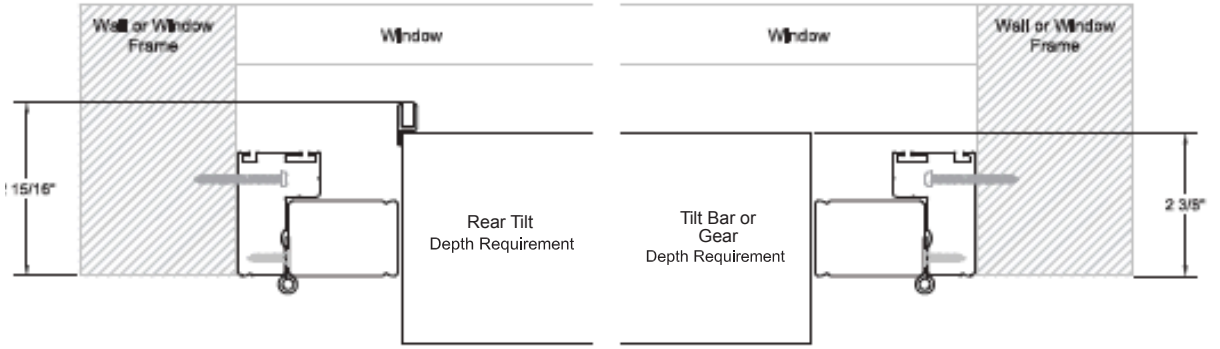

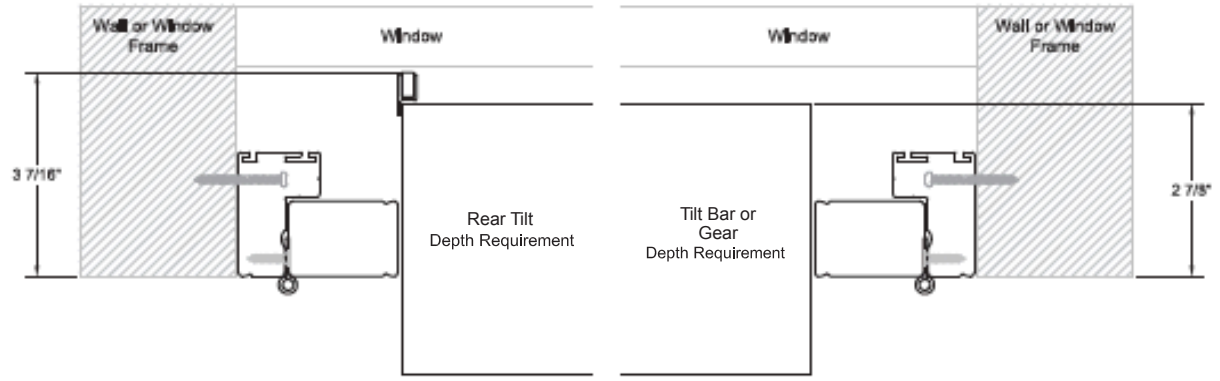

Clearance Charts do not take into consideration any obstructions including cranks, latches, muntin bars, mullions or windows that tilt in. Always recommended to use frame and panel to confirm clearance.

Recessed Inside Mount with Casing Sill Frame

Depth Clearance

With Rear Tilt	With Tilt Bar or Gear
2 1/2” Louver = 2 7/16”	2 1/2” Louver = 2 7/16”
3 1/2” Louver = 2 15/16”	3 1/2” Louver = 2 7/16”
4 1/2” Louver = 3 7/16”	4 1/2” Louver = 2 7/8”

Note: Depth clearance is the minimum window opening depth required for shutters to operate without interference.

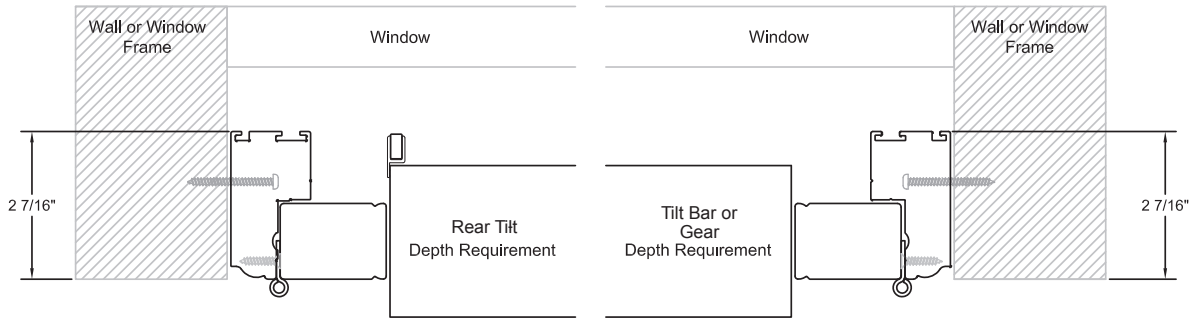

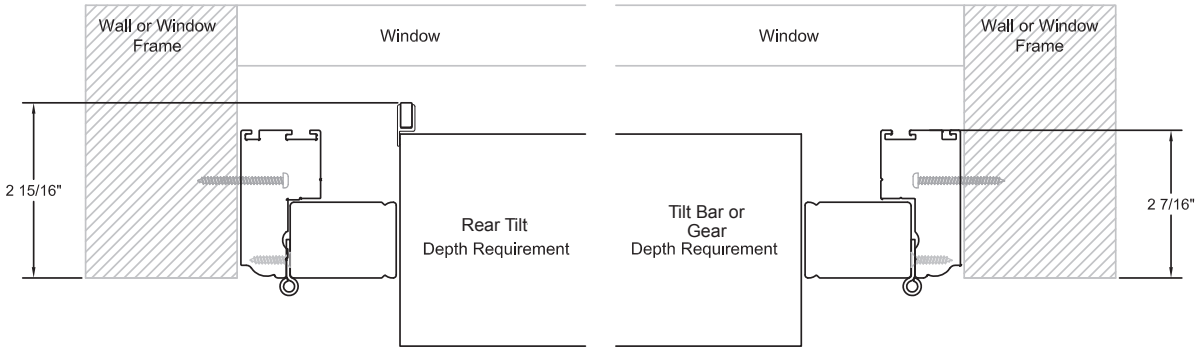

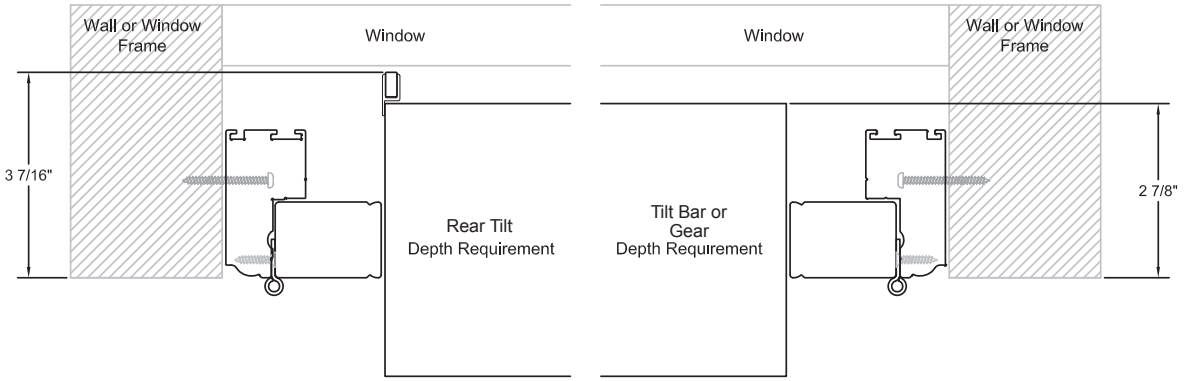

Clearance Charts do not take into consideration any obstructions including cranks, latches, muntin bars, mullions or windows that tilt in. Always recommended to use frame and panel to confirm clearance.

Inside Mount with Z-Frame

Depth Clearance

With Rear Tilt	With Tilt Bar or Gear
2 1/2” Louver = 1 5/8”	2 1/2” Louver = 1 1/4”
3 1/2” Louver = 2 1/8”	3 1/2” Louver = 1 7/16”
4 1/2” Louver = 2 5/8”	4 1/2” Louver = 2 1/16”

Note: Depth clearance is the minimum window opening depth required for shutters to operate without interference.

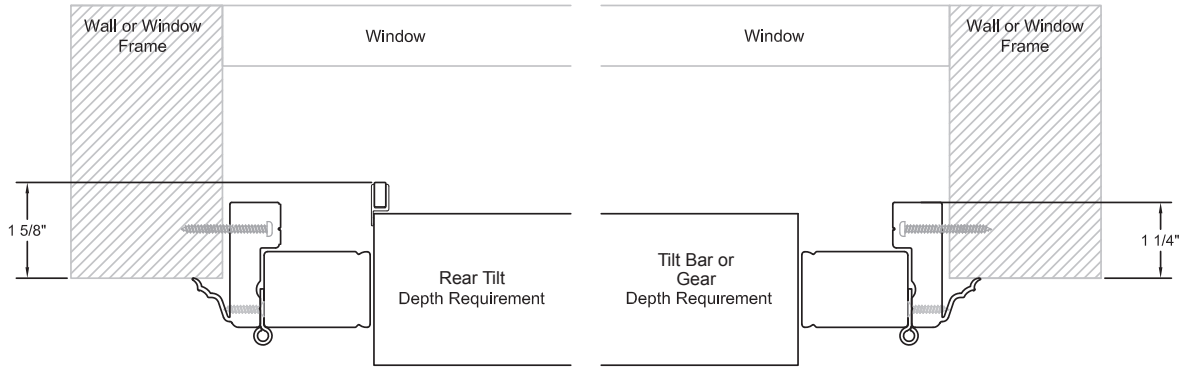

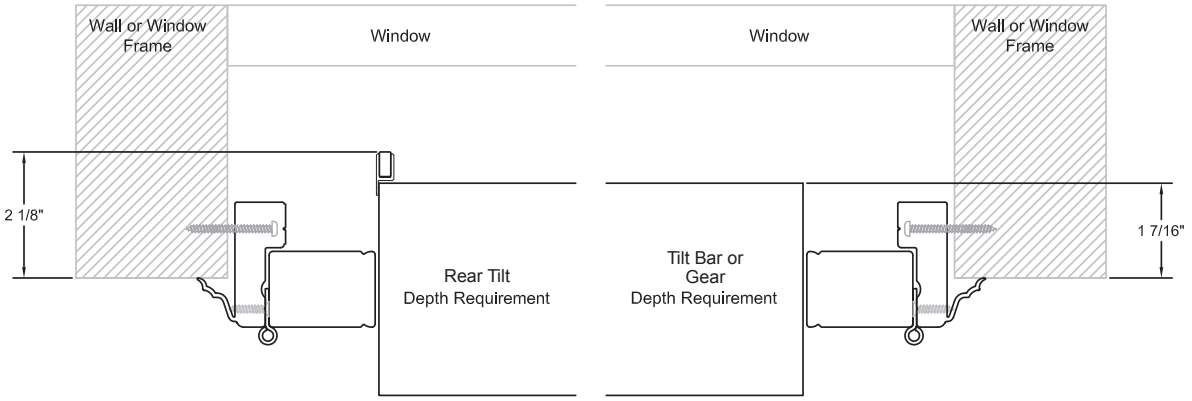

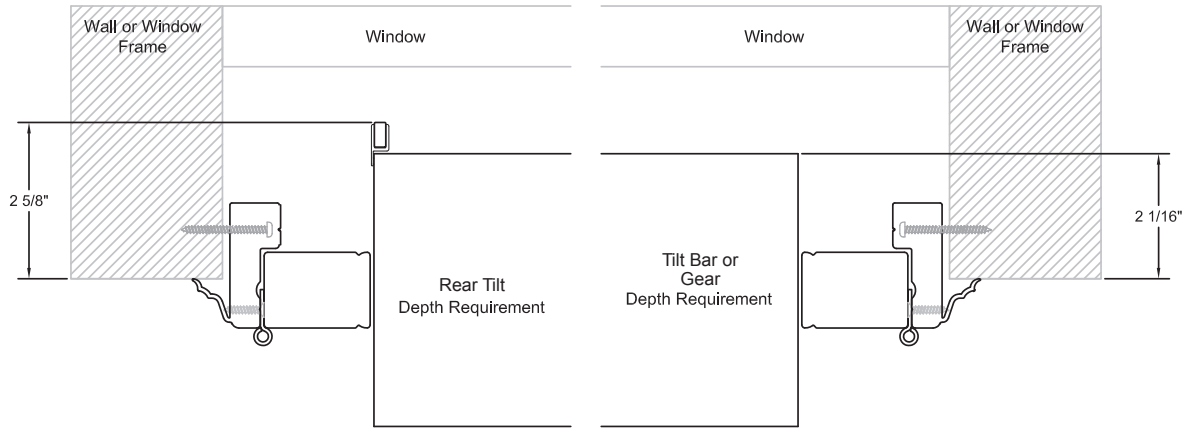

Clearance Charts do not take into consideration any obstructions including cranks, latches, muntin bars, mullions or windows that tilt in. Always recommended to use frame and panel to confirm clearance.

Inside Mount with Trim Frame with Flex

Depth Clearance

With Rear Tilt	With Tilt Bar or Gear
2 1/2” Louver = 1 1/2”	2 1/2” Louver = 1 1/8”
3 1/2” Louver = 2”	3 1/2” Louver = 1 7/16”
4 1/2” Louver = 2 1/2”	4 1/2” Louver = 1 15/16”

Note: Depth clearance is the minimum window opening depth required for shutters to operate without interference.

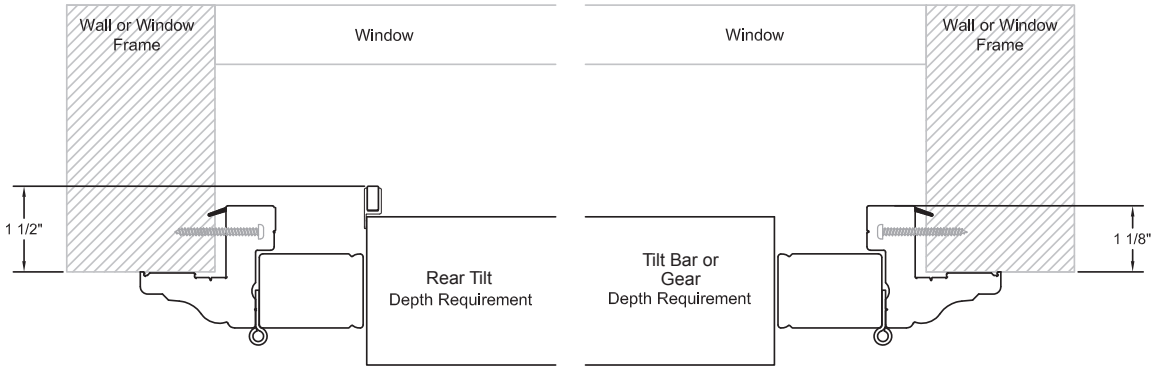

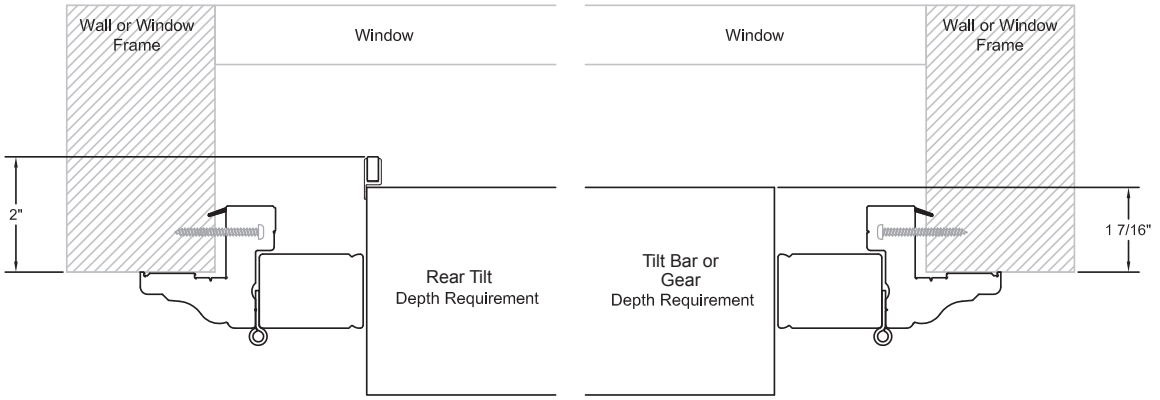

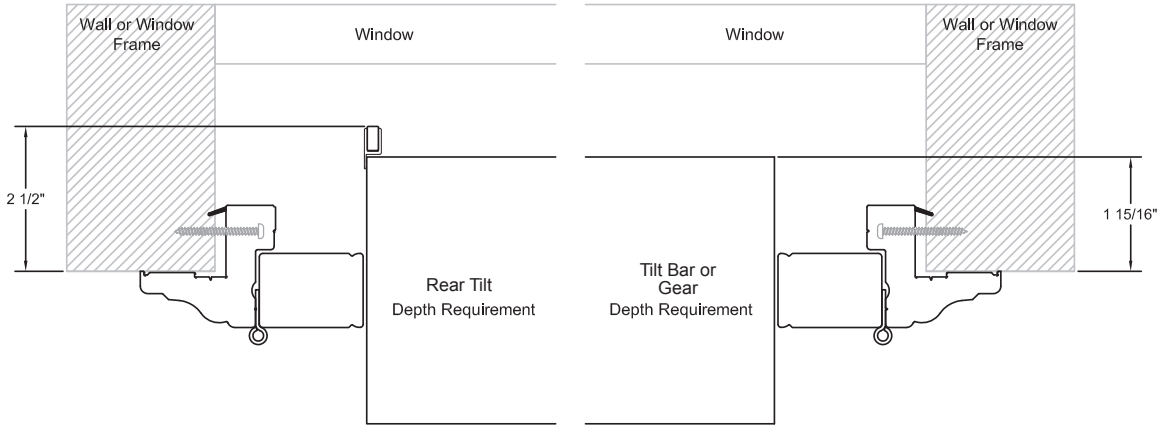

Clearance Charts do not take into consideration any obstructions including cranks, latches, muntin bars, mullions or windows that tilt in. Always recommended to use frame and panel to confirm clearance.

Inside Mount with Bullnose Z Frame with Flex

Depth Clearance

With Rear Tilt	With Tilt Bar or Gear
2 1/2” Louver = 1 5/8”	2 1/2” Louver = 1 3/8”
3 1/2” Louver = 2 3/16”	3 1/2” Louver = 1 5/8”
4 1/2” Louver = 2 11/16”	4 1/2” Louver = 2 1/8”

Note: Depth clearance is the minimum window opening depth required for shutters to operate without interference.

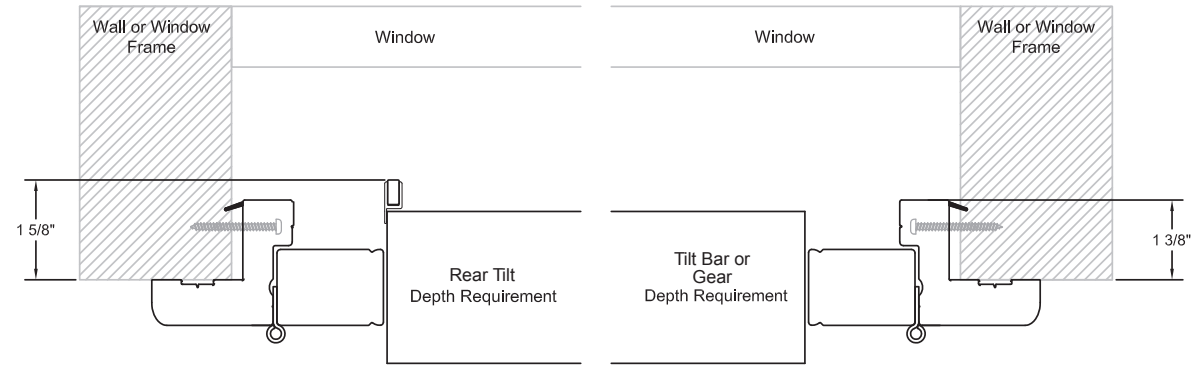

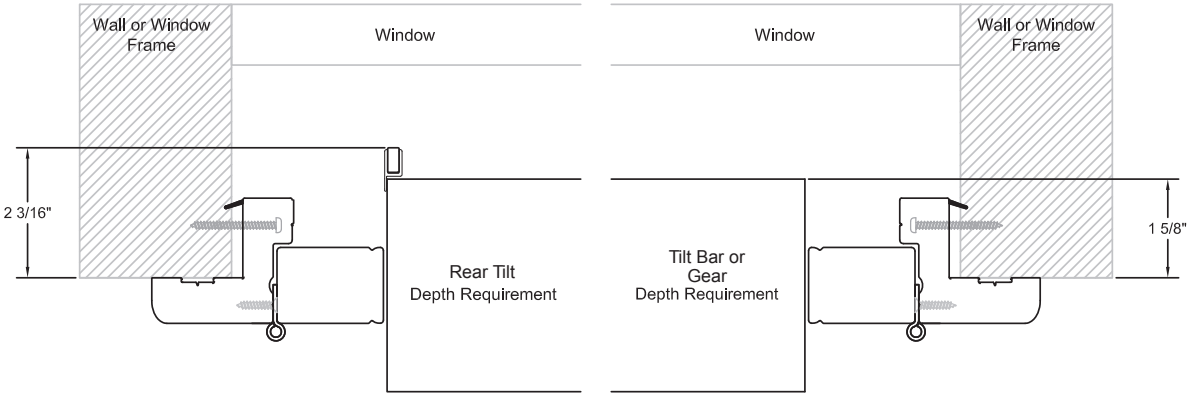

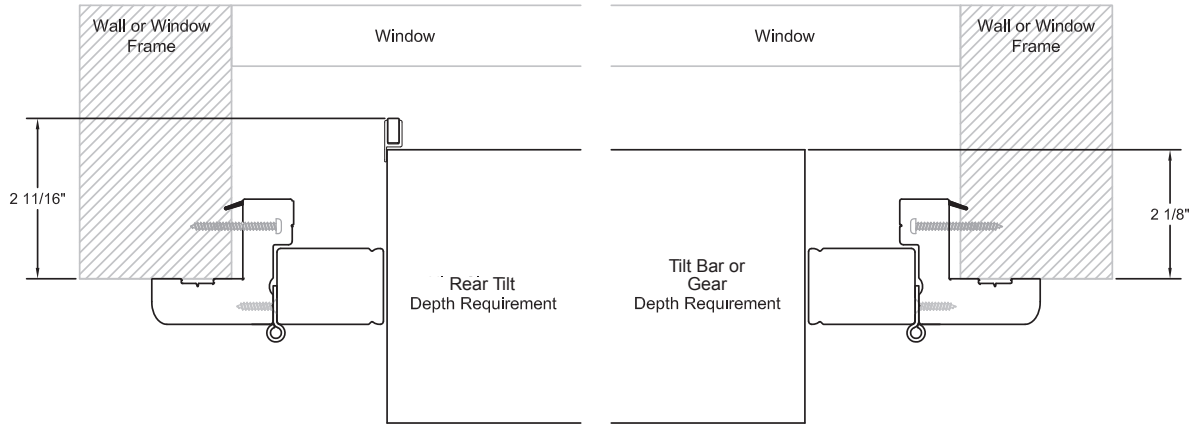

Clearance Charts do not take into consideration any obstructions including cranks, latches, muntin bars, mullions or windows that tilt in. Always recommended to use frame and panel to confirm clearance.

Inside Mount with Deluxe Trim Frame

Depth Clearance

With Rear Tilt	With Tilt Bar or Gear
2 1/2” Louver = 1 1/2”	2 1/2” Louver = 1 1/8”
3 1/2” Louver = 2”	3 1/2” Louver = 1 7/16”
4 1/2” Louver = 2 1/2”	4 1/2” Louver = 1 15/16”

Note: Depth clearance is the minimum window opening depth required for shutters to operate without interference.

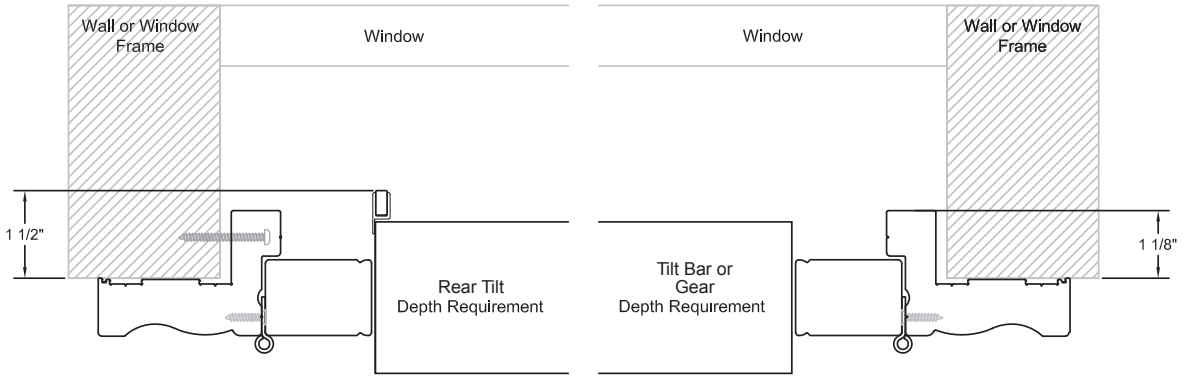

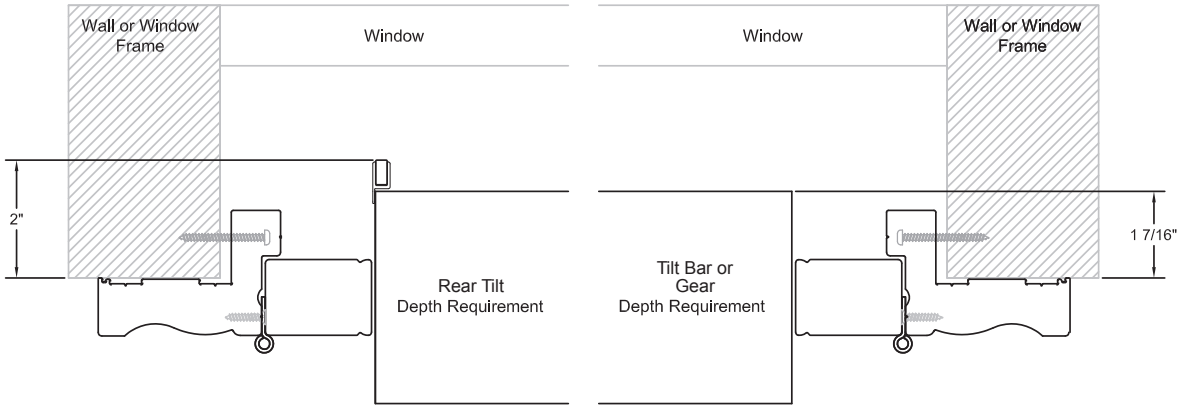

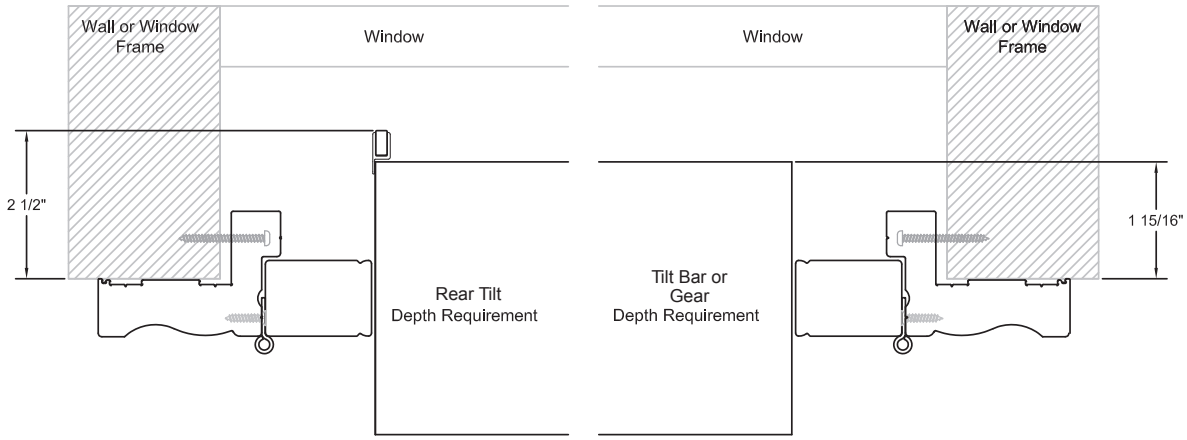

Clearance Charts do not take into consideration any obstructions including cranks, latches, muntin bars, mullions or windows that tilt in. Always recommended to use frame and panel to confirm clearance.

Outside Mount with L Frame

Depth Clearance

With Rear Tilt	With Tilt Bar or Gear
2 1/2” Louver = 3/8”	2 1/2” Louver = 0”
3 1/2” Louver = 7/8”	3 1/2” Louver = 5/16”
4 1/2” Louver = 1 3/8”	4 1/2” Louver = 13/16”

Note: Depth clearance is the minimum window opening depth required for shutters to operate without interference.

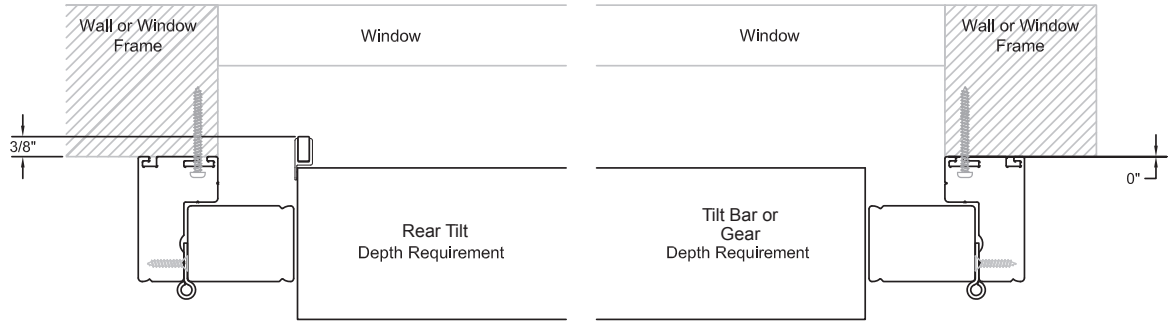

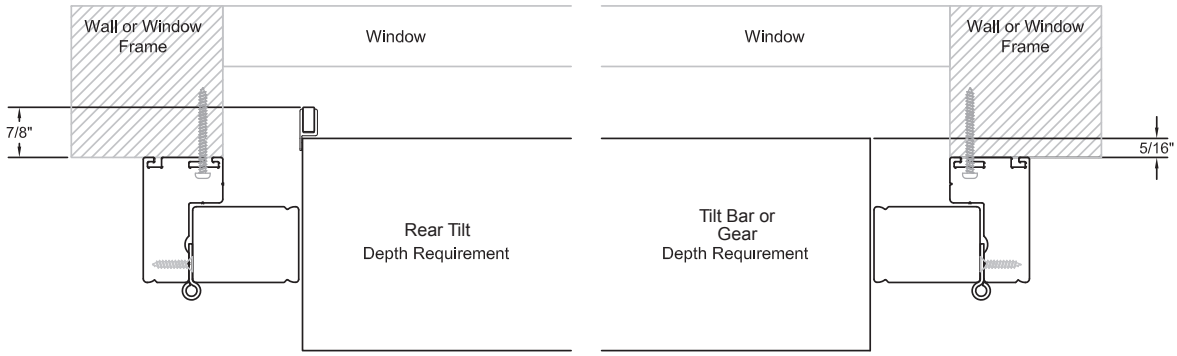

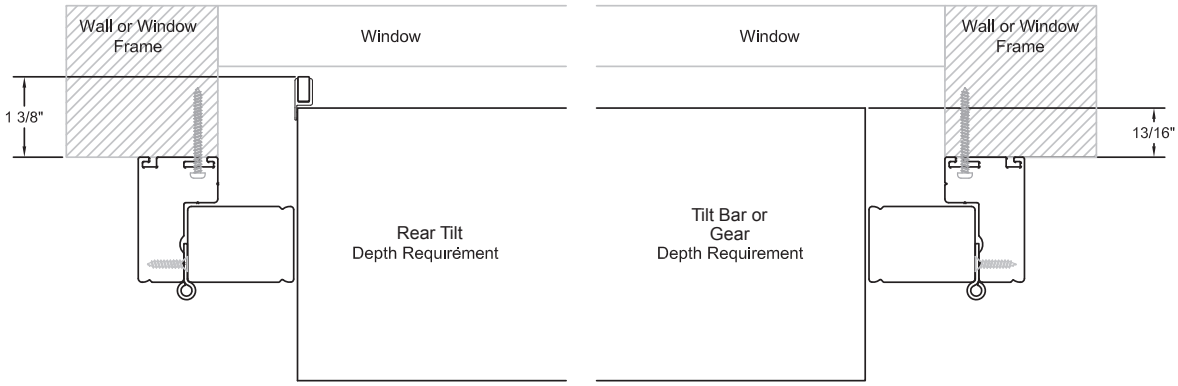

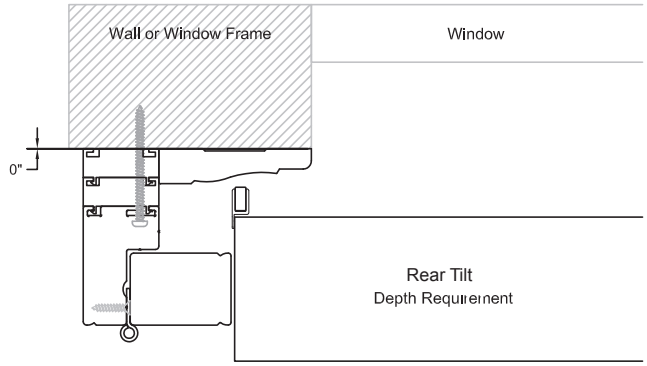

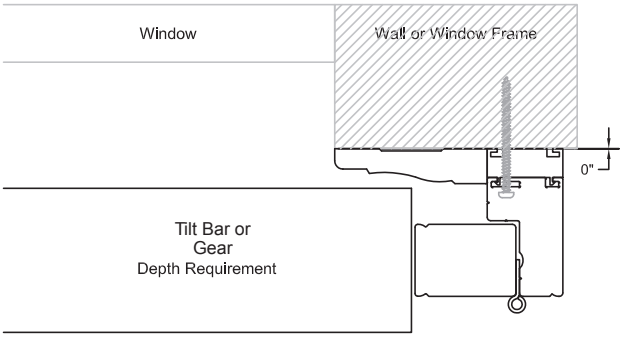

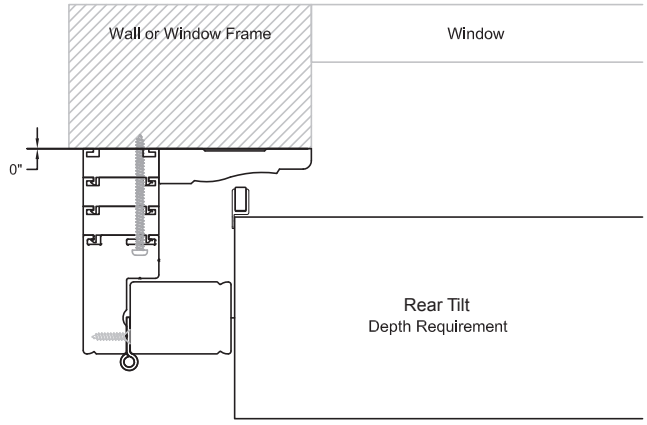

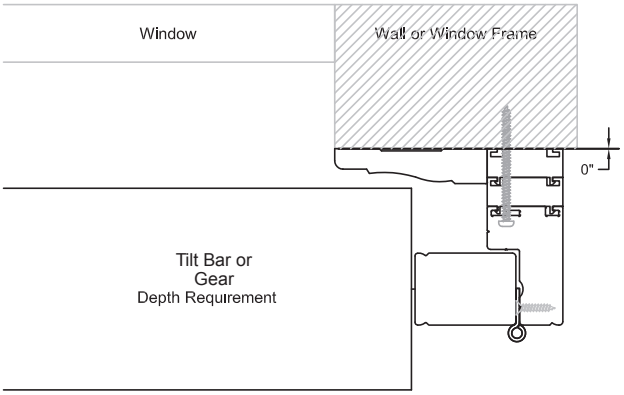

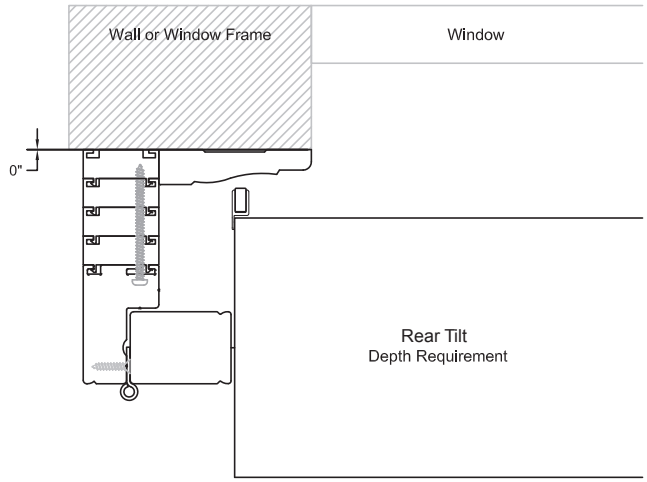

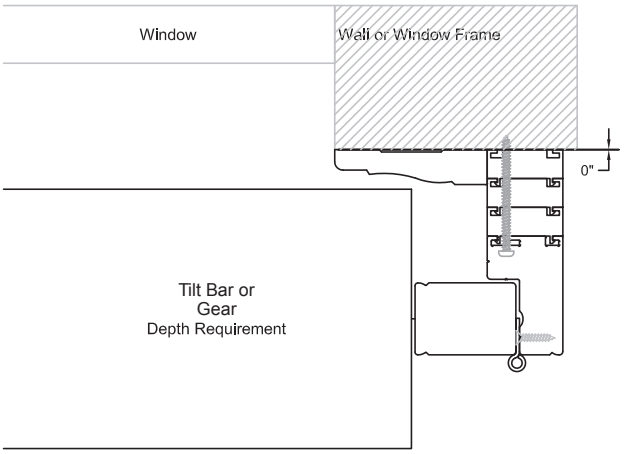

Clearance Charts do not take into consideration any obstructions including cranks, latches, muntin bars, mullions or windows that tilt in. Always recommended to use frame and panel to confirm clearance.

Outside Mount Beside Trim with L Frame

Depth Clearance

With Rear Tilt	With Tilt Bar or Gear
2 1/2” Louver = 0”	2 1/2” Louver = 0
3 1/2” Louver = 0”	3 1/2” Louver = 0”
4 1/2” Louver = 0”	4 1/2” Louver = 7/16”

Note: Depth clearance is the minimum window opening depth required for shutters to operate without interference.

Clearance Charts do not take into consideration any obstructions including cranks, latches, muntin bars, mullions or windows that tilt in. Always recommended to use frame and panel to confirm clearance.

Outside Mount with Casing Frame

Depth Clearance

With Rear Tilt	With Tilt Bar or Gear
2 1/2” Louver = 0”	2 1/2” Louver = 0”
3 1/2” Louver = 1/2”	3 1/2” Louver = 0”
4 1/2” Louver = 1”	4 1/2” Louver = 7/16”

Note: Depth clearance is the minimum window opening depth required for shutters to operate without interference.

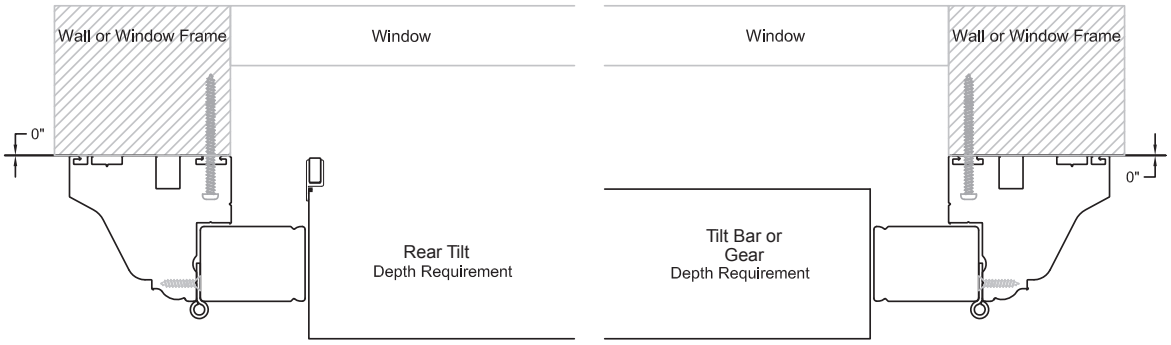

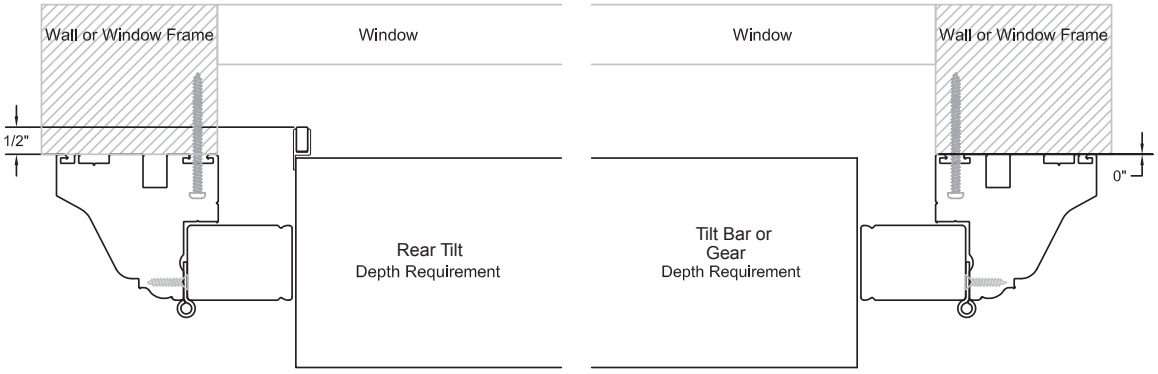

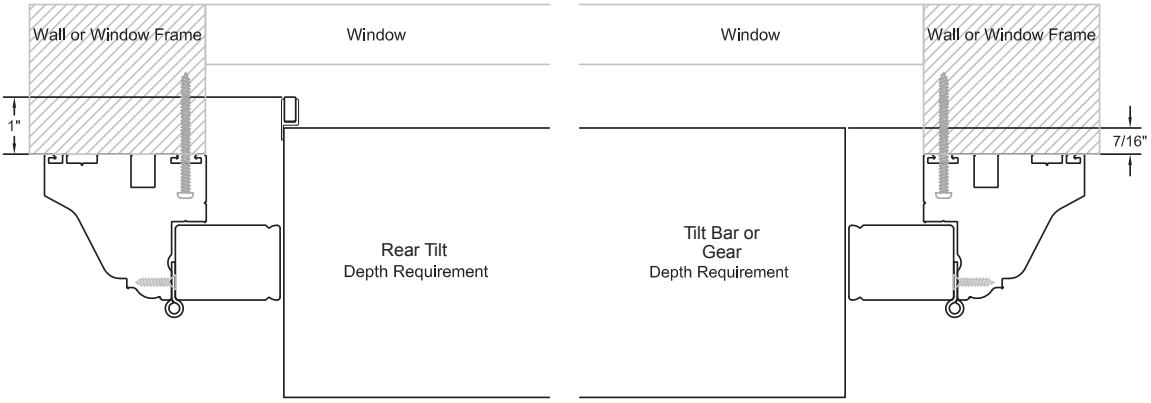

Clearance Charts do not take into consideration any obstructions including cranks, latches, muntin bars, mullions or windows that tilt in. Always recommended to use frame and panel to confirm clearance.

Outside Mount on Top of Existing Trim with Casing Frame

Depth Clearance With Rear Tilt	With Tilt Bar or Gear
2 1/2” Louver = 0”	2 1/2” Louver = 0
3 1/2” Louver = 0”	3 1/2” Louver = 0”
4 1/2” Louver = 3/8”	4 1/2” Louver = 0”

Note: Depth clearance is the minimum window opening depth required for shutters to operate without interference.

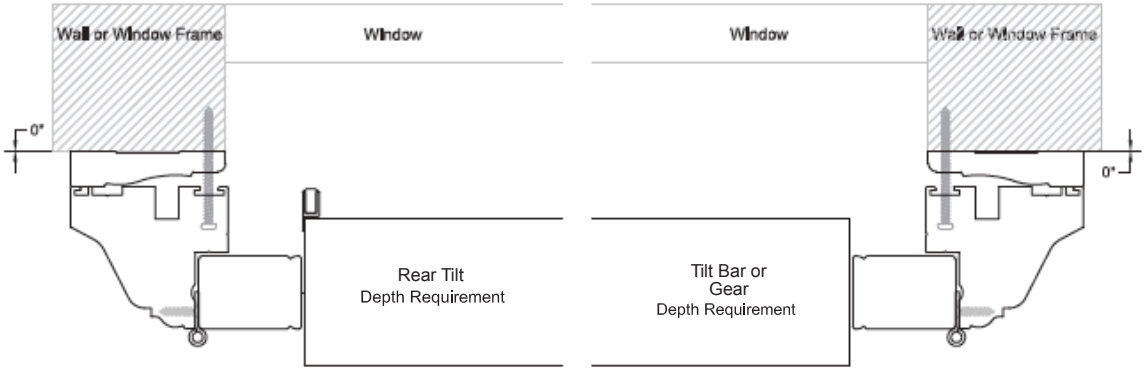

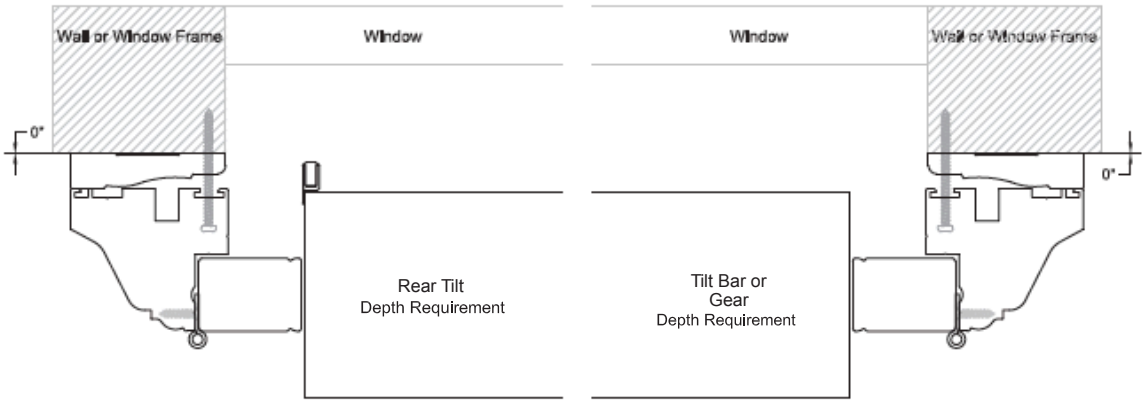

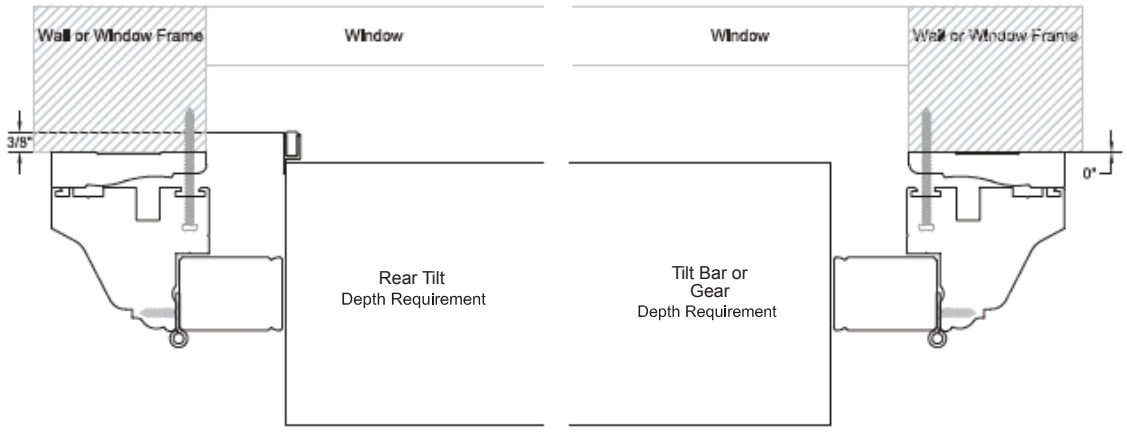

Clearance Charts do not take into consideration any obstructions including cranks, latches, muntin bars, mullions or windows that tilt in. Always recommended to use frame and panel to confirm clearance.

Outside Mount with S Frame

Depth Clearance

With Rear Tilt	With Tilt Bar or Gear
2 1/2” Louver = 5/16”	2 1/2” Louver = 0”
3 1/2” Louver = 13/16”	3 1/2” Louver = 1/4”
4 1/2” Louver = 1 5/16”	4 1/2” Louver = 3/4”

Note: Depth clearance is the minimum window opening depth required for shutters to operate without interference.

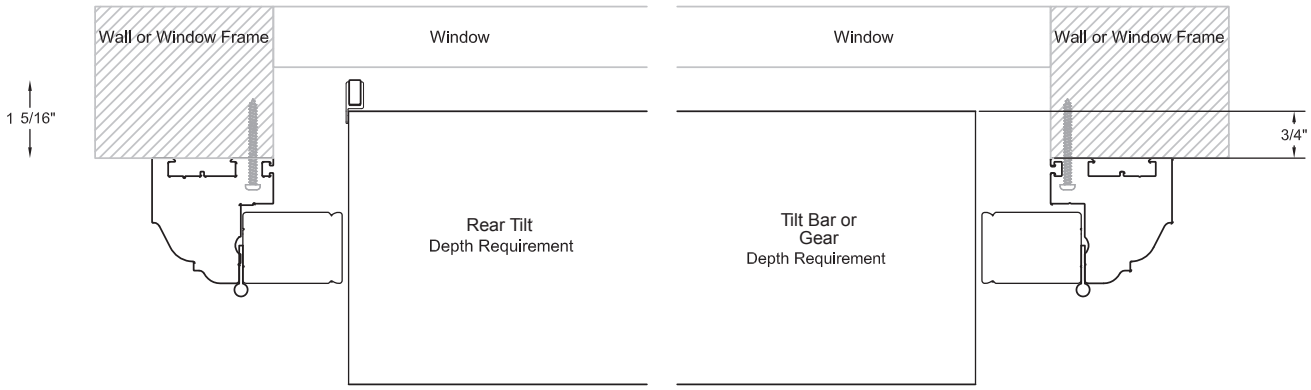

Clearance Charts do not take into consideration any obstructions including cranks, latches, muntin bars, mullions or windows that tilt in. Always recommended to use frame and panel to confirm clearance.

Outside Mount on Top of Existing Trim with S Frame

Depth Clearance

With Rear Tilt	With Tilt Bar or Gear
2 1/2” Louver = 0”	2 1/2” Louver = 0”
3 1/2” Louver = 1/4”	3 1/2” Louver = 0”
4 1/2” Louver = 13/16”	4 1/2” Louver = 1/4”

Note: Depth clearance is the minimum window opening depth required for shutters to operate without interference.

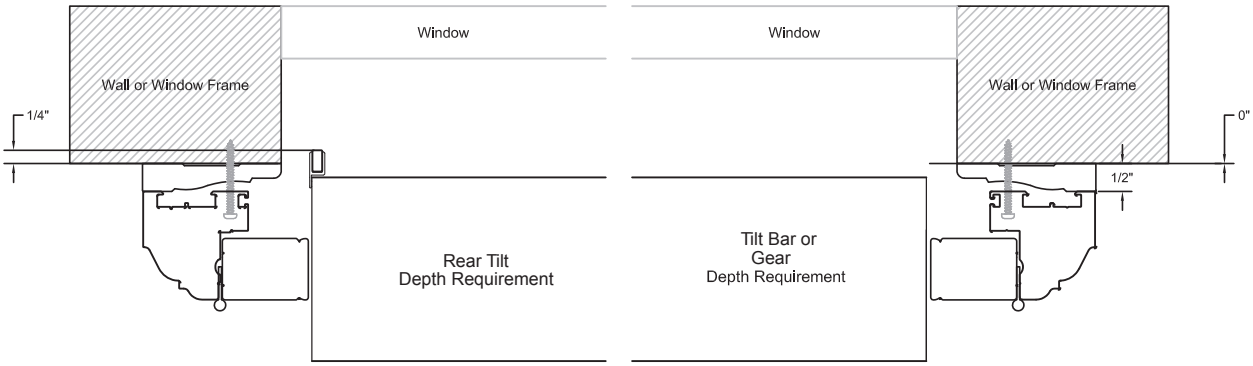

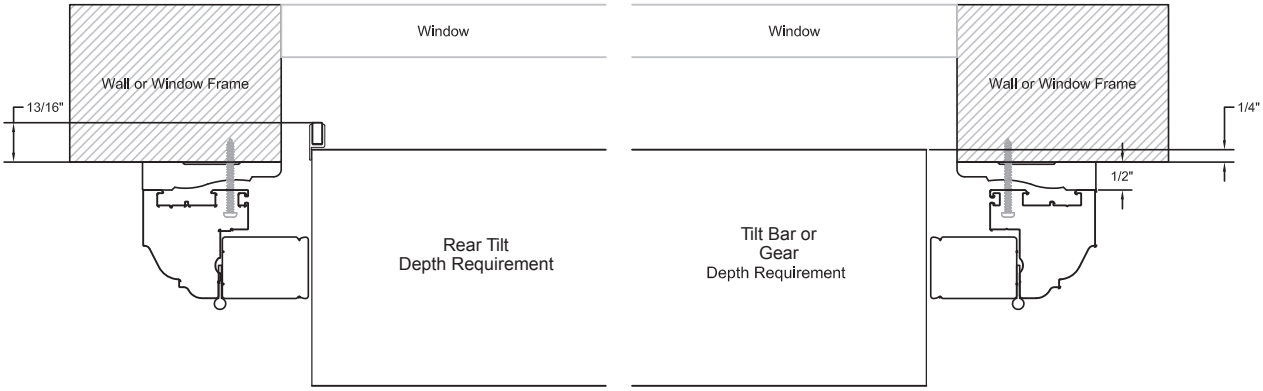

Deduction Summary for Inside Mount (IM) - Combining standard frames with one , two or three sill frames

	Inside Mount (IM) deduction for each side that indicates the standard frame side	Inside Mount (IM) deduction for each side that indicates a sill frame side (up to 3 sides)
L Frame	1/16"	L frame does not have a sill frame
Z Frame	1/8"	1/16"
Deluxe Trim Frame	1/8"	1/16"
Bullnose Z Frame with Flex	3/16"	1/16" (Sill frame does not have flex)
Trim Frame with Flex	3/16"	1/16" (Sill frame does not have flex)

Two Sided Frames (Left & Right or Top & Bottom) do not receive any factory frame deductions
An inside mount opening can be ordered without deductions (YES to Inside Mount then NO to Deductions)

Deduction Summary for Inside Mount (IM) - Using a sill frame as the only frame in the opening

	Inside Mount (IM) deduction for each side that indicates the standard frame side	Inside Mount (IM) deduction for each side that indicates a sill frame side (up to 3 sides)
Casing Sill Frame	1/16"	N/A since using the Sill as the frame
Trim or Z Sill Frame (same frame)	1/16"	N/A since using the Sill as the frame
Bullnose Z Sill Frame	1/16"	N/A since using the Sill as the frame

Two Sided Frames (Left & Right or Top & Bottom) do not receive any factory frame deductions
An inside mount opening can be ordered without deductions (YES to Inside Mount then NO to Deductions)

Outside Mount Frames do not receive any frame deduction

D

DESIGNING THE RIGHT SHUTTER

Helpful Hints

- Follow the general rules below when choosing a shutter style.
- Record all details on an Order Form to ensure accurate record.
- Use a steel measuring tape to take measurements.

Options
Before measuring, discuss the various options available with your customer.

- louver size
- frames vs no frames
- color
- type of installation
- color of hinges
- inside or outside mount
- frame options
- divider rails
- tilt options:
  - tilt bar
  - rear tilt
  - gear
- shutter configuration:
  - standard
  - double hung
  - café
- swing radius

Note: Shutters are room darkening but not black-out.

Obstructions
When measuring, account for obstructions such as protruding window cranks and window sills. Protruding cranks may be replaced with T-handles, or can be accom modated with projection mounts or outside mount (refer to Section C- Clearance Charts). Shutters may be installed on top of sills using either three or four sided frames, or using four sided L-Frames with added extensions.

Depth clearances
This is the depth of window jamb required for trouble free louver operation.
Measure the clearance required for desired application (refer to Section C- Clearance Charts). Use your sample panels and frames from your shop at home bag to ensure proper depth.

Single panels
The minimum single panel width is 6” and the maximum single panel width is 36”.

Bi-fold panels (shown as LL [Left Bi-fold] or RR [Right Bi-fold])
A maximum of two panels may be hinged together. The combined widths may not exceed 48”.

T Post
The 1 1/4” T Post has been designed to accept aluminum reinforcement. Aluminum reinforcement is available upon request.

Shutters with Uneven Panel Widths

Uneven Panel Widths without a T-Post

1. Measure total width and height.
   O.M.=Outside frame to outside frame
   I.M.=Opening size
2. Record number of panels and hinge style (i.e., P4-LLRR).
3. Measure from the left side:
   A. From the left edge of the frame to the right edge of the first panel for an outside mount or from the left inside opening to the right edge of the first panel for an inside mount.
   B. For any middle panels measure from the left edge to the right edge of each panel.
   C. For the right panel, measure from the left edge of the last panel to the right edge of the frame for an outside mount, or to the right inside opening for inside mount.
4. Record these measurements in the “Uneven Panel Widths Section” of the Order Form. The panel widths added together should equal the total overall width.

Outside Mount

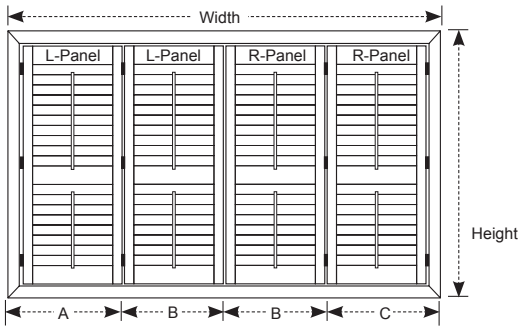

Inside Mount

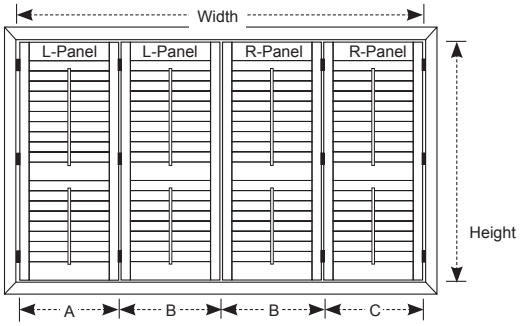

Uneven Panel Widths OR Uneven T-Post Distances

Line #	Panel 1/ 1st T-Post	Panel 2/ 2nd T-Post	Panel 3/ 3rd T-Post	Panel 4/ 4th T-Post

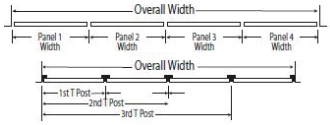

Uneven Panel Widths with T-Posts

1. Measure total width and height.
   O.M.=Outside frame to outside frame
   I.M.=Opening size
2. Record number of panels and hinge style (i.e., P3-LTLTR).
3. All T-Post distances are measured starting from left side of opening frame to center of each T-Post.
4. Record these measurements in the “Uneven T-Post Distances” section of the Order Form.

Outside Mount

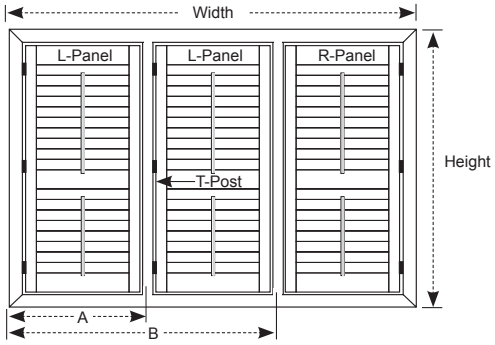

Inside Mount

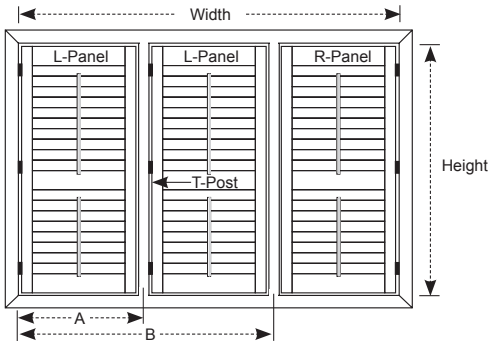

Importance of Height Consistency

- **Shutter height is made up of a unique combination of:**
  1) a top rail
  2) a bottom rail
  3) a number of evenly spaced louvers
  4) a divider rail if over 66” tall
- **To achieve a uniform appearance, divider rail placement, as well as maintain an equal number of louvers in adjacent shutters, all shutters must be ordered the same height.**

If the height measurements differ, apply one of the three options below:

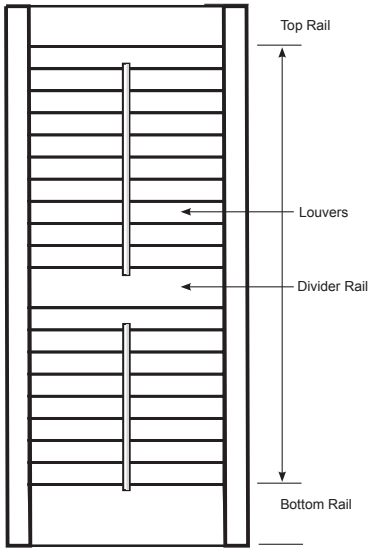

1. For inside mount without frame, L Frame or Z Frame, reduce taller height measurement by 1/8” max.; order shutters same height.
2. For inside mount with Bullnose Z Frame, Trim Frame, or Deluxe Trim Frame, reduce 1/2” max. from tallest height measurement; order shutters same height.
3. For height adjustments of more than 1/2”, go to an outside mount; to order shutters same height.

Locating Divider Rails

Divider rail is required if shutter panel height is over 66”. A second divider rail is required if panel height is over 96”. Distance between rails must be less than 66”. Although added strength is the main feature of a divider rail, it also allows bottom louvers to be fully closed for privacy and top louvers open for light. The distance between the middle of the divider rail and the top or bottom of the opening may be limited by the space between the rails. There can be challenges when there are 5 louvers or less between the divider rail and the top/bottom rail of the panel. See the chart on the next page (D5) for small distances above divider rails for clarification.

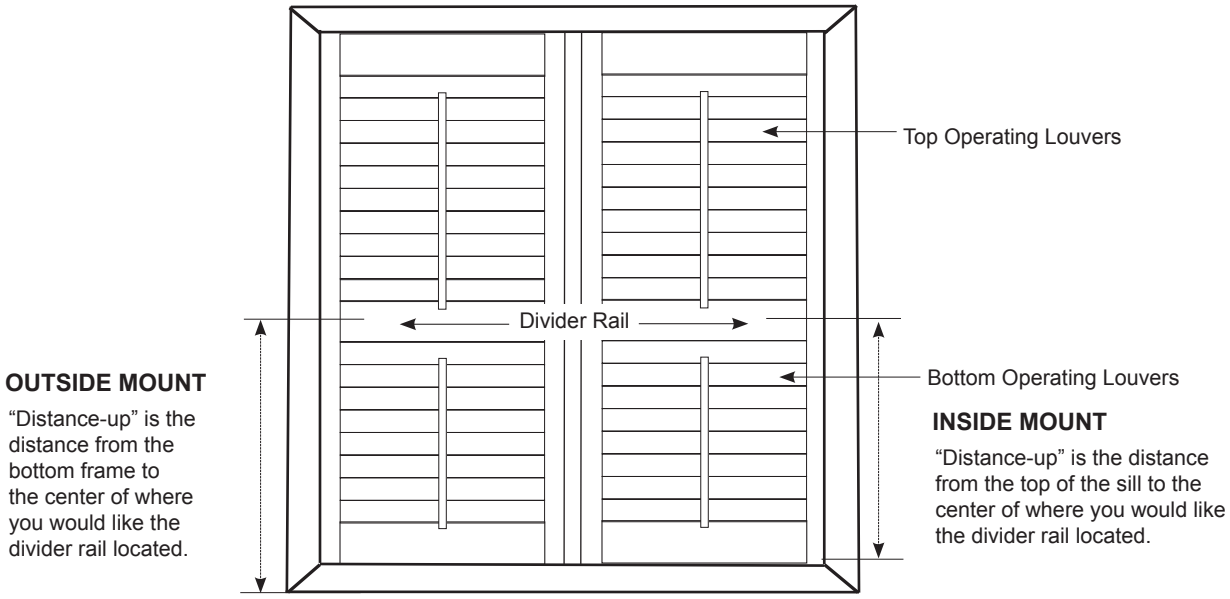

Note: Center line location of divider rails may vary up or down by a maximum of 1 1/2”. For adjacent openings to have same divider location the height must be same.

Matching Divider Rail Locations

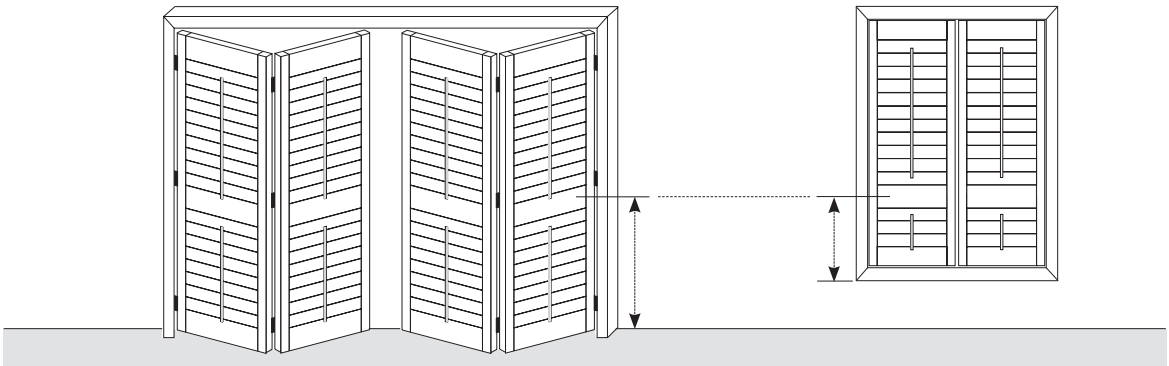

When divider rails are desired at a similar height from the floor, from window to window, or from room to room, measure height of center of divider rail from the floor up to the same point on the second window, then measure down to the bottom of the shutter. This measurement down is the “distance-up”. If you require a specific divider rail location, please specify in the remarks section on the order form. If it is not possible, we will contact you with the options.

Divider Rail Width

- 2 5/8”

Small Distance Above / Below Divider Rail with 4” rails

Situation **Require a reasonable louver overlap where there is a small distance above the divider rail with 4" rails**

Solution **Determine divider rail distance up by subtracting the distance up for divider rail location from the measured ordered height**

According to specifications, divider rails should not be closer than 16" to each other for visual and stability reasons.

Warranty is applicable if
a) Provided it is listed on the chart below, the span is less than 16".
b) A minimum of 2 louvers are required between the divider and top/bottom rails
c) 66" is the maximum distance between the center of the divider rail and the top/bottom rail

NOTE: Calculations are for all operating systems, but two louvers with tilt bars are not recommended for louver drop

FRAME TYPE - IM	NO FRAME	Z or DT or BZ or Trim Sill	Z or DT	BZ or Trim	L or Casing SII or S Sill
INSIDE MOUNT	Middle of divider to top of opening	Middle of divider to top of opening	Middle of divider to top of opening	Middle of divider to top of opening	Middle of divider to top of opening
2 1/2 - 2 Louvers	9 7/8" - 10 1/4"	10" 7/16 - 10 13/16"	10 1/2" - 10 7/8"	10 9/16" - 10 15/16"	10 11/16" - 11 1/16"
3 1/2 - 2 Louvers	**11 5/8" - 12 1/4"**	**12 3/16" - 12 13/16"**	**12 1/4" - 12 7/8"**	**12 5/16" - 12 15/16"**	**12 7/16" - 13 1/16"**
4 1/2 - 2 Louvers	13 5/8" - 14 1/4"	14 3/16" - 14 13/16"	14 1/4" - 14 7/8"	14 5/16" - 14 15/16"	14 7/16" - 15 1/16"
2 1/2 - 3 Louvers	11 5/8" - 12 3/8"	12 3/16" - 12 15/16"	12 1/4" - 13"	12 5/16" - 13 1/16"	12 7/16" - 13 3/16"
3 1/2 - 3 Louvers	**13 7/8" - 15 3/8"**	**14 7/16" - 15 15/16"**	**14 1/2" - 16"**	**14 9/16" - 16 1/16"**	**14 11/16" - 16 3/16"**
4 1/2 - 3 Louvers	17" - 18 3/8"	17 9/16" - 18 15/16"	17 5/8" - 19"	17 11/16" - 19 1/16"	17 13/16" - 19 3/16"
2 1/2 - 4 Louvers	13 1/4" - 14 1/2"	13 15/16" - 15 1/16"	13 7/8" - 15 1/8"	13 15/16" - 15 3/16"	14 1/16" - 15 5/16"
3 1/2 - 4 Louvers	**16 3/8" - 18 1/2"**	**16 15/16" - 19 1/16"**	**17" - 19 1/8"**	**17 1/16" - 19 3/16"**	**17 3/16" - 19 5/16"**
4 1/2 - 4 Louvers	20 1/8" - 22 1/2"	20 11/16" - 23 1/16"	20 34" - 23 1/8"	20 13/16" - 23 3/16"	20 15/16" - 23 5/16"
2 1/2 - 5 Louvers	15 1/8" - 16 5/8"	15 11/16" - 17 3/16"	15 3/4" - 17 1/4"	15 13/16 -17 5/16"	15 15/16 - 17 7/16"
3 1/2 - 5 Louvers	**19 1/8" - 21 5/8"**	**19 11/16" - 22 3/16"**	**19 3/4 - 22 1/4"**	**19 13/16" - 22 5/16"**	**19 15/16" - 22 7/16"**
4 1/2 - 5 Louvers	23 5/8" - 26 5/8"	24 3/16" - 27 3/16"	24 1/4" - 27 1/4"	24 5/16" - 27 5/16"	24 7/16" - 27 7/16"

FRAME TYPE - OM	L or Casing Sill or S Sill	Casing Frame	S Frame	Track OM - 3 sided
OUTSIDE MOUNT	Middle of divider to top of frame	Middle of divider to top of frame	Middle of divider to top of frame	Middle of divider to top of frame
2 1/2 - 2 Louvers	10 5/8" - 11 "	12"- 12 3/8"	11 5/16"- 11 11/16"	12 3/8" - 12 3/4"
3 1/2 - 2 Louvers	**12 3/8" - 13"**	**13 3/4" - 14 3/8"**	**13 1/16" - 13 11/16"**	**14 1/8" - 14 3/4"**
4 1/2 - 2 Louvers	14 3/8" - 15"	15 3/4" -16 3/8"	15 1/16" -15 11/16"	16 1/8" - 16 3/4"
2 1/2 - 3 Louvers	12 3/8" - 13 1/8"	13 3/4" - 14 1/2"	13 1/16" - 13 13/16"	14 1/8" - 14 7/8"
3 1/2 - 3 Louvers	**14 5/8" - 16 1/8"**	**16" - 17 1/2"**	**15 5/16" - 16 13/16"**	**16 3/8" - 17 7/8"**
4 1/2 - 3 Louvers	17 3/4" - 19 1/8"	19 1/8" - 20 1/2"	18 7/16" - 19 13/16"	19 1/2" - 20 7/8"
2 1/2 - 4 Louvers	14" - 15 1/4"	15 3/8" - 16 5/8"	14 11/16" - 15 15/16"	15 3/4" - 17"
3 1/2 - 4 Louvers	**17 1/8" - 19 1/4"**	**18 1/2" - 20 5/8"**	**17 13/16" - 19 15/16"**	**18 7/8" - 21"**
4 1/2 - 4 Louvers	20 7/8" - 23 1/4"	22 1/4" - 24 5/8"	21 9/16" - 23 15/16"	22 5/8" - 25"
2 1/2 - 5 Louvers	15 7/8" - 17 3/8"	17 1/4" - 18 3/4"	16 9/16" - 18 1/16""	17 5/8" - 19 1/8"
3 1/2 - 5 Louvers	**19 7/8" - 22 3/8"**	**21 1/4" - 23 3/4"**	**20 9/16" - 23 1/16"**	**21 5/8" - 24 1/8"**
4 1/2 - 5 Louvers	24 3/8" - 27 3/8"	25 3/4" - 28 3/4"	25 1/16" - 28 1/16"	26 1/8" - 29 1/8"

Location Split Tilt

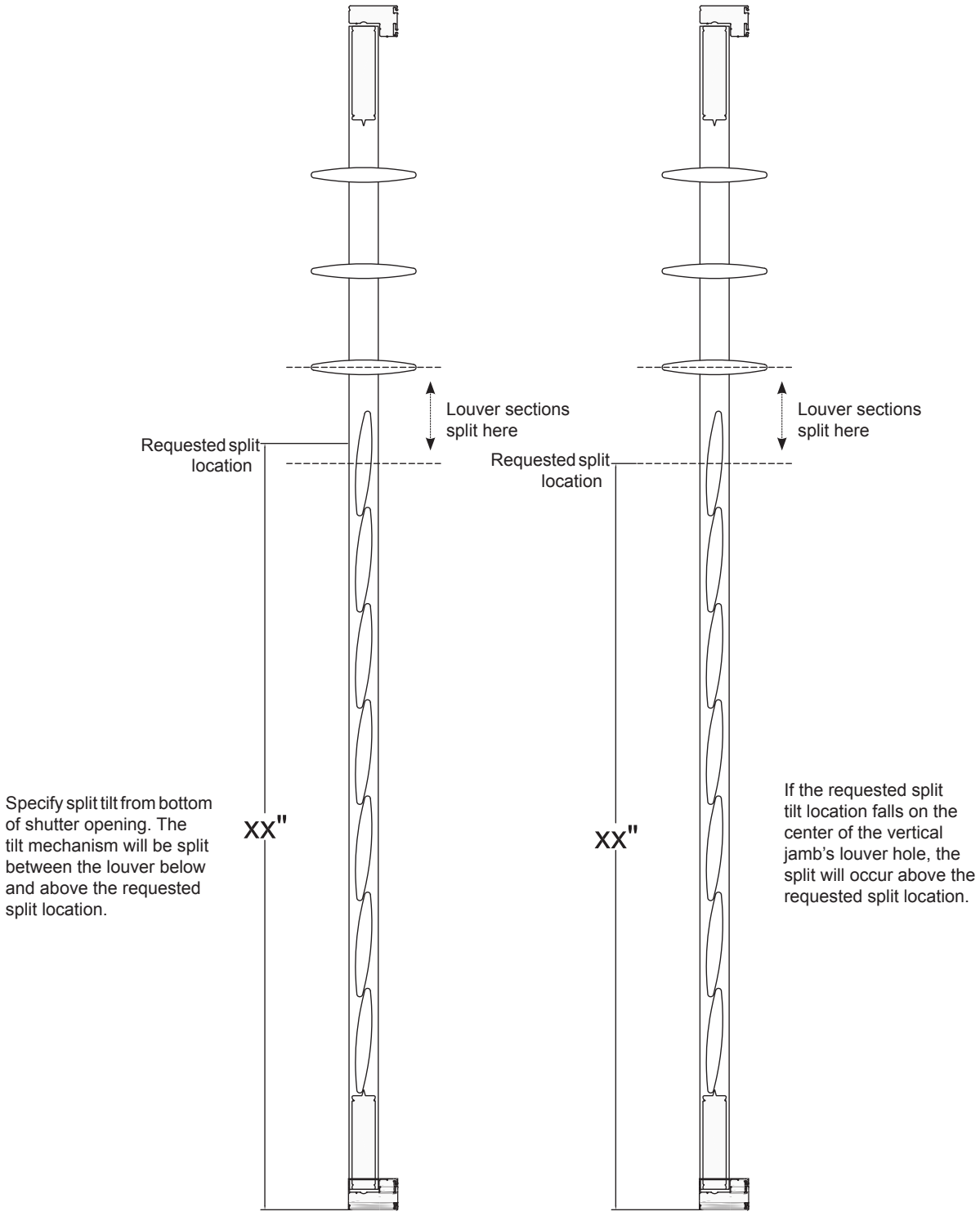

If specific number of louvers are desired for a split section, the order must have a note indicating request.

Top and Bottom Rails

Two rail sizes are used for all shutters:
The louver size determines the minimum panel height and top and bottom rail options.
Refer to B section of the manual. 2” rail option is only available on panels up to 36” in height.
Specifications are slightly different for double hungs. Refer to page D8 for details.

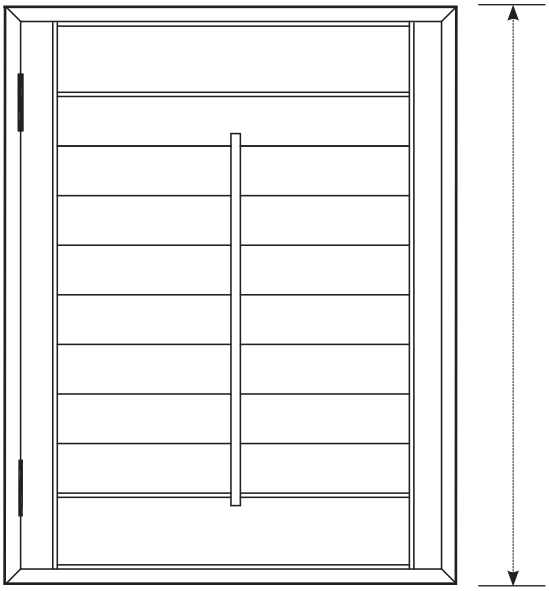

Panels 36” in height or less have the option of 2” top and bottom rails.

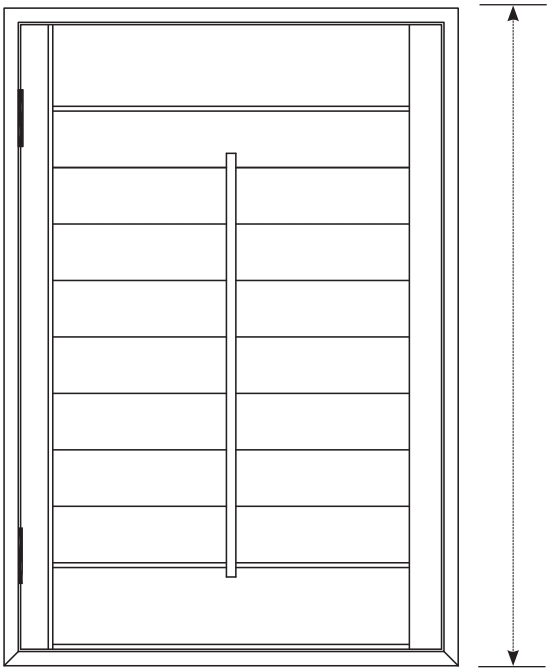

Panels over 36” in height have 4” top and bottom rails.

Double Hung Shutters

Double hung shutters are panels stacked vertically within a single framed shutter unit.

- An optional 1-1/4” horizontal T-post is available for added strength. (specify in the given space at the bottom right of the order form)
- Location of split between panels or the centre of the horizontal T-post is required as is measured from bottom of opening.
- Minimum panel height is 16” for both panels, which means the minimum split height is also 16”-20” depending on frame type, T-post, etc.

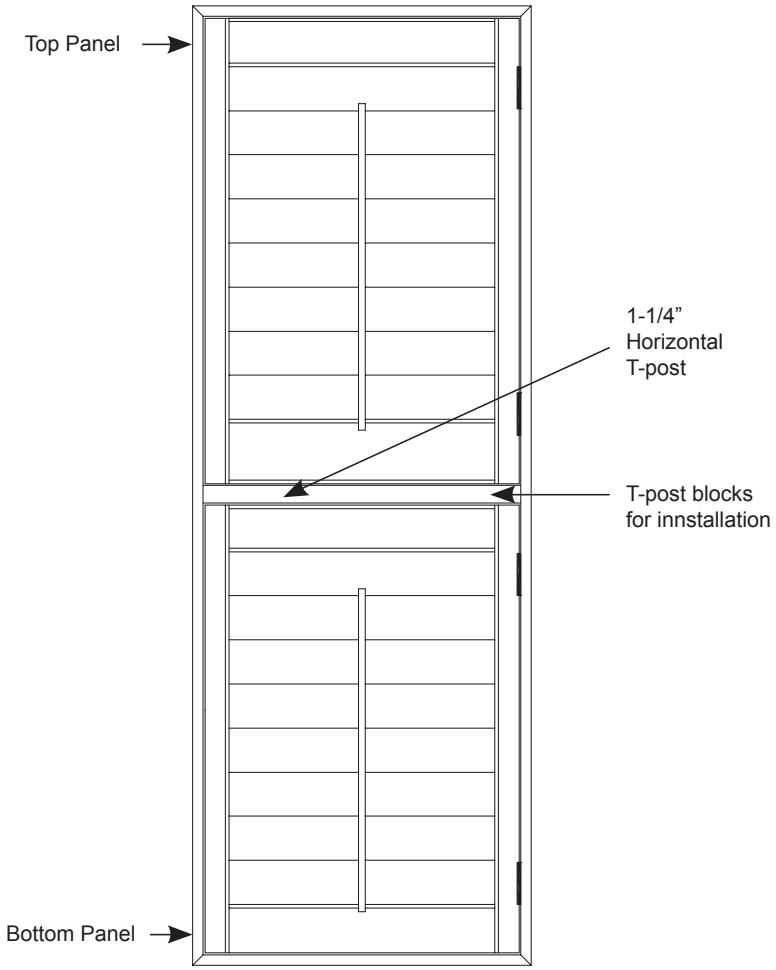

Frame Cut-Out

L, Z, Trim Frame, Deluxe Trim Frame or Sill Frame

Measuring

Top and Bottom frame Cut-Outs are measured from the left side of the window opening. Side frame Cut-Outs are measured from the bottom of the opening.

Indicate the Cut-Out side on the order form: Left, Right, Top or Bottom.

Please note maximum frame Cut-Out is maximum 7”

Cut-Outs must start no less then 2” from the left or the bottom of the frame.

Full Back- Frame Cut-Out
(Type B)

E

MEASURING GUIDE

Z-Frame, Trim Frame, Bullnose Z Frame, Deluxe Trim Frame, L Frame, Mounting Strip or No Frame (use Standard Order Form)

1. CHOICE OF FRAME & LOUVER

- The appropriate frame will be affected by the mount type, depth clearance, existing trim, etc.
- Use samples panels, frames and color samples from the shop at home bag.
- Make sure that the chosen frame and louver size will function properly once installed into the opening.
- Ensure the chosen application will overcome any possible obstructions such as latches, cranks or windows that open into the room.
- Number of frame sides is based on the configuration and type of shutter. Four sided frames are recommended for most standard shutters.
- Frame Extensions are not available for inside mount applications.

2. INSIDE MOUNT vs. OUTSIDE MOUNT

- Check for squareness by measuring the diagonal and/or use a sample panel and place at each corner.
- If the diagonal measurements are not identical, a framed application is recommended for inside mounts. An unframed application will result in uneven light gaps.
- If the diagonal measurements are out more than 3/8", then an outside mount is recommended.
- If the proper clearance is not available, an outside mount may be necessary for larger louvers and/or Rear Tilt.

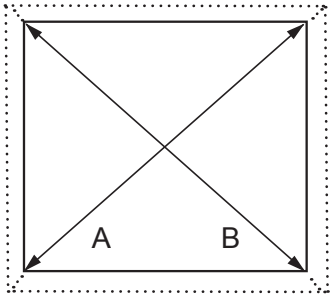

Diagonal Squareness Check

3. MEASURE INSIDE WIDTH

- Measure the width in three places (top, middle & bottom) and record the smallest measurement to 1/16".
- For windows with vertical mullions, match the panel widths to each section of the window with or without T Posts. (See Page D2 for measuring instructions)

4. MEASURE INSIDE HEIGHT

- Measure the height in three places (left, middle & right) and record the smallest measurement to 1/16".
- Panel heights under 36" may be ordered with optional 2" rails. The 4" rails are standard unless specified otherwise.

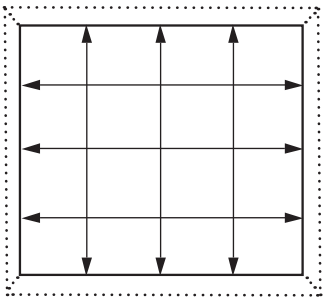

Inside Measurements

5. DIVIDER RAILS

- Measure from the bottom of the sill to the middle of the divider rail location.
- One divider rail is required for panels over 66" in height with a maximum 66" between the middle of the divider rail and either top or bottom rail.
- Two divider rails are required for panels over 96" in height with a maximum 66" between any two rails.
- Refer to Page D4 for additional divider rail measuring instructions.
- Due to excessive louver overlap that may occur, there should be no less than 18" between dividers or a divider rail and top/bottom rail.

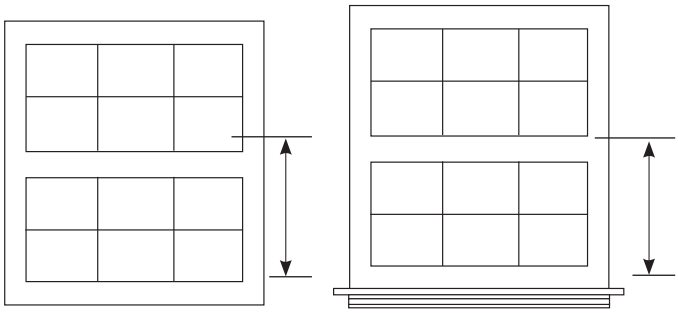

Casing Frame, S Frame or L Frame (use Standard Order Form)

1. CHOICE OF LOUVER & FRAME

- Use samples panels, frames and color samples from the shop at home bag.
- Make sure that the chosen frame and louver size will function properly once installed into the opening.
- Ensure the chosen application will overcome any possible obstructions such as latches, cranks or windows that open into the room.
- If windows include trim, outside mount shutters may be installed on top of, or next to the trim.
- If windows do not include trim, then the shutters are mounted where the trim would be.
- The minimum width of trim required for Casing Frame is 2 11/16”, S Frame is 2”, L Frame is 1 3/8”.
  If the trim width is less than the frame width, then the frame should be extended outside of the trim, not inside the opening.
- Number of frame sides is based on the configuration and type of shutter. Four sided frames are recommended for most standard shutters.
- Depth clearance and obstructions can prevent louvers from operating properly. In order to overcome these obstacles, add the necessary frame extensions to the appropriate frame.
- Frame Extensions are available for outside mount applications. Up to (3) 1/2” extensions can be added to either frame for greater projection. (Up to (4) L Frame Extensions are available with French doors.)

2. MEASURE OUTSIDE WIDTH

<u>If on top of trim</u>

- Measure from outside of trim to outside of trim in three places (top, middle & bottom. Ensure the frame does not extend into the opening. Record the largest measurement to 1/16”.
- If the chosen frame extends pas the edge of the trim, then measure the width from outside of trim to outside of trim in three places (top, middle & bottom). Add it to the measurement that the frame extends past the trim on each side.

<u>If no trim</u>

- Measure the inside width in three places (top, middle & bottom). Take the largest measurement to 1/16” and add 1 3/8” per side for L Frame, 2” per frame side for S Frame, or 2 11/16” per side for Casing Frame.

<u>If installing around trim</u>

- Measure from outside of trim to outside of trim in three places (top, middle & bottom) Add 1 3/8’ per frame side for L Frame, 2” per frame side for S Frame, or 2 11/16” per side for Casing Frame. Record the largest measurement to 1/16”.

3. MEASURE OUTSIDE HEIGHT

<u>If on top of trim</u>

- Measure from outside of trim to outside of trim in three places (left, middle & right). Ensure the frame does not exend into the opening. Record the largest measurement to 1/16”.
- If the chosen frame extends past the edge of the trim, then measure the height from outside of trim to outside of trim inthree places (top, middle & bottom). Add it to the measurement that the frame extends past the trim on each side.

<u>If no trim</u>

- Measure the inside width in three places (top, middle & bottom). Take the largest measurement to 1/16” and add 1 3/8” per frame side for L Frame, 2” per frame side for S Frame, or 11/16” per side for Casing Frame.

<u>If installing around trim</u>

- Measure from outside of trim to outside of trim in three places (left, middle & right). Record the largest measurement to 1/16”, add 1 3/8” per frame side for L Frame, 2” per frame side for S Frame, or 2 11/16” per side for Casing Frame.
- Panel heights under 36” may be ordered with optional 2” ails. The 4” rails are standard unless specified otherwise.

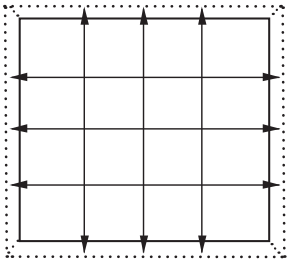

Outside Measure-ments

4. DIVIDER RAILS

- Measure from the bottom of the bottom frame to the middle of the divider rail location.
- One divider rail is required for panels over 66” in height with a maximum 66” between the middle of the divider rail and either top or bottom rail.
- Two divider rails are required for panels over 96” in height with a maximum 66” between any two rails.
- Refer to Page D4 for additional divider rail measuring instructions
- Due to excessive louver overlap that may occur, there should be no less than 18” between dividers or a divider rail and top/bottom rail.

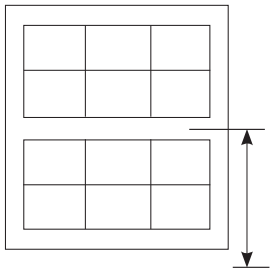

Inside Mount: 3 Individual Openings - Z-Frame, Trim Frame, Bullnose Z Frame, Deluxe Trim Frame, L Frame, Mounting Strip or No Frame (use Standard Order Form)

1. CHOICE OF LOUVER & FRAME

- Use samples panels, frames and color samples from the shop at home bag.
- Make sure that the chosen frame and louver size will function properly once installed into the opening.
- Ensure the chosen application will over come any possible obstructions such as latches, cranks or windows that open into the room.
- Number of frame sides is based on the configuration and type of shutter. Four sided frames are recommended for most standard shutters.
- Frame Extensions are not available for inside mount applications.

2. INSIDE MOUNT vs. OUTSIDE MOUNT

- Check for squareness by measuring the diagonal and/or use a sample panel and place at each corner.
- If the diagonal measurements are not identical, a framed application is recommended for inside mounts. An unframed application will result in uneven light gaps.
- If the diagonal measurements are out more than 3/8", then an outside mount is recommended.
- If the proper clearance is not available, an outside mount may be necessary for larger louvers and/or the Rear Tilt system (Clearview).

3. MEASURE INSIDE WIDTH (Each opening)

- Measure width at top, middle and bottom and record the smallest measurement to 1/16".
- For windows with vertical mullions, match the panel widths to each section of the window with or without T Posts. (See Page D2 for measuring instructions)

4. MEASURE INSIDE HEIGHT (Each opening)

- Measure height at left, middle and right and record the smallest measurement to 1/16".
- Panel heights under 36" may be ordered with optional 2" rails. The 4" rails are standard unless specified otherwise.

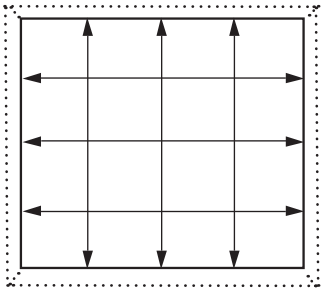

Inside Measure-
ments

5. DIVIDER RAILS

- Measure from the bottom of the sill to the middle of the divider rail location.
- One divider rail is required for panels over 66" in height with a maximum 66" between the middle of the divider rail and either top or bottom rail.
- Two divider rails are required for panels over 96" in height with a maximum 66" between any two rails.
- Refer to Page D4 for additional divider rail measuring instructions.
- Due to excessive louver overlap that may occur, there should be no less than 18" between dividers or a divider rail and top/bottom rail.

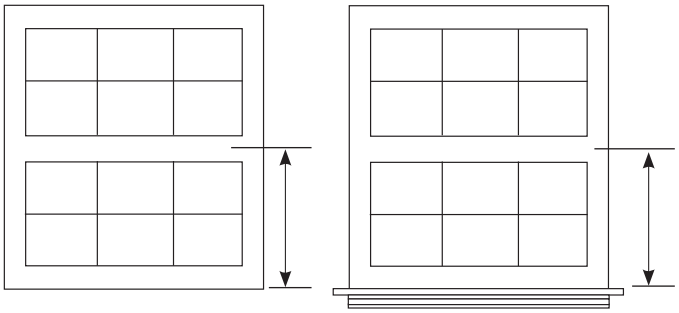

Inside Mount Compound Miter - Z-Frame, Trim Frame, Bullnose Z Frame, Deluxe Trim Frame or L Frame (use Bay Window Order Form)

1. CHOICE OF FRAME & MOUNT TYPE

- Use samples panels, frames and color samples from the shop at home bag.
- Make sure that the chosen frame and louver size will function properly once installed into the opening.
- Ensure the chosen application will overcome any possible obstructions such as latches, cranks or windows that open into the room.
- If the proper clearance is not available, an outside mount may be necessary for larger louvers and/or the Rear Tilt system (Clearview).
- If the diagonal measurements of each opening are out more than 3/8", then an outside mount is recommended.
- Number of frame sides is based on the configuration and type of shutter. Four sided frames are recommended for most standard shutters.
- Frame Extensions are not available for inside mount applications.
- A Sill Frame is only available on the Z, Trim, Bullnose Z and Deluxe Trim Frames. Unless otherwise requested, the Sill Frame will be placed on the bottom. The Sill Frame can also be requested for the top or either side.

2. DETERMINE MOUNTING PROJECTION

- Place chosen frame against the left bottom sill of the "A" opening and make a 3" pencil mark at the back of the frame from the inside jamb.
- Slide the frame along the bottom sill to the right side of the "A" opening. Make a 3" pencil mark at the back of the frame to the right side.
- Follow the same process for openings B & C.
- Use a flat edge to extend the lines at each corner until they intersect.
- Repeat the process for the top sill.

3. MEASURE INSIDE WIDTH (Openings A, B, & C)

- Measure opening "A" from the pencil mark on the left side of the opening to the intersection of lines at angle 1 at both the bottom and top of the window opening. Record the narrowest measurement to 1/16".
- Measure opening "B" from the intersection of lines at angle 1 to the intersection of lines at angle 2 at both the top and bottom of the window opening. Record the narrowest measurement to 1/16".
- Measure opening "C" from the intersection of lines at angle 2 to the pencil mark on the right side of the opening at both top and bottom of the window opening. Record the narrowest measurement to 1/16".

4. MEASURE INSIDE HEIGHT (Openings A, B, & C)

- Measure height at left, middle and right and record the smallest measurement to 1/16".
- Panel heights under 36" may be ordered with optional 2" rails. The 4" rails are standard unless specified otherwise

5. DETERMINE THE ANGLES

- Using a protractor, measure both angles at points 1 and 2 at the top and bottom.
- If angles are not the same on the top and bottom, split the difference.

6. DIVIDER RAILS

- Measure from the bottom of the sill to the middle of the divider rail location.
- One divider rail is required for panels over 66" in height with a maximum 66" between the middle of the divider rail and either top or bottom rail.
- Two divider rails are required for panels over 96" in height with a maximum 66" between any two rails.
- Refer to Page D4 for additional divider rail measuring instructions.

7. SURCHARGE IS APPLICABLE

- Compound Miter Bay Window will incur a surcharge.

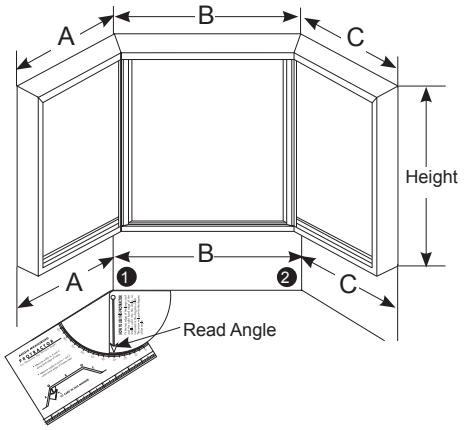

Fit the top edge of the large card and the right hand edge of the smaller card into the angle, as indicated in the diagram at left. The arrow will point to the degree of the angle.

Inside Mount with Two Sided Frame - Z-Frame, Trim Frame, Bullnose Z Frame, Trim Frame, Deluxe Trim Frame, or No Frame (use Standard Order Form)

1. CHOICE OF LOUVER & FRAME

- Use samples panels, frames and color samples from the shop at home bag.
- Make sure that the chosen frame and louver size will function properly once installed into the opening.
- Ensure the chosen application will overcome any possible obstructions such as latches, cranks or windows that open into the room.
- Number of frame sides is based on the configuration and type of shutter. Four sided frames are recommended for most standard shutters.

2. INSIDE MOUNT vs. OUTSIDE MOUNT

- Check for squareness by measuring the diagonal and/or use a sample panel and place at each corner.
- If the diagonal measurements are not identical, a framed application is recommended for inside mounts. An unframed application will result in uneven light gaps.
- If the diagonal measurements are out more than 3/8", then an outside mount is recommended.
- If the proper clearance is not available, an outside mount may be necessary for larger louvers and/or the Rear Tilt system.

3. MEASURE INSIDE WIDTHS (Openings A, B & C)

Left Opening (A)

- Place chosen frame or panel only into place at the extreme left side.
- Place T-Post at desired location at the left angle perpendicular to center opening.
- Measure from the left front edge of the frame to the middle of the front of the left T-Post.
- Enter width to 1/16" into 1st T-Post position in the Uneven T-Post Distance box on the Standard Order Form.
- If using an inverted hinge configuration, there are no T-Posts hence the distance is from left front edge of opening or frame to front right edge of where panel is to end. That measurement would be entered in the first box under the Uneven Panel Widths.

Center Opening (B)

- Place T-Posts in the desired position. Measure distance between middle front of each T-Post.
- The measurement between T-Posts added to the measurements of the left opening are entered into the 2nd T-Post position to 1/16" under the Uneven T-Post Distances box on the Standard Order Form.
- If using an inverted hinge configuration, tthe distance of the center panels would be the exact sizes you wish the panels to be and entered in the 2nd and 3rd boxes under the Uneven Panel Widths.

Right Opening (C)

- Place chosen frame or panel only into place at the extreme right side.
- Place T-Post at desired location at the right angle – perpendicular to the center opening.
- Measure from the middle of the front of the T-Post to the extreme right front of the frame or panel.
- The measurement of right opening added to the distance entered in the 2nd T-Post position distances box is the width measurement to 1/16" to be entered as the overall width on the Standard Order Form.
- If using an inverted hinge configuration, the distance would be from the left front edge of the center opening to the front right edge where the panel or frame is to end. That measurement would be entered in the 4th box under the Uneven Panel Widths.

4. MEASURE INSIDE HEIGHTS (Openings A, B, & C)

- Measure height at left, middle and right and record the smallest measurement to the 1/16".
- Height measurement for all panels must be the same.
- Panel heights under 36" may be ordered with optional 2" rails. The 4" rails are standard unless specified otherwise

5. DIVIDER RAILS

- Measure from the bottom of the sill to the middle of the divider rail location.
- One divider rail is required for panels over 66" in height with a maximum 66" between the middle of the divider rail and either top or bottom rail.
- Two divider rails are required for panels over 96" in height with a maximum 66" between any two rails.
- Refer to Page D4 for additional divider rail measuring instructions.

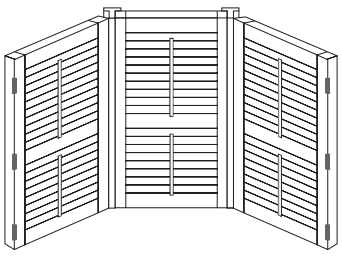

Inside Mount with Three Adjacent L Frames (use Standard Order Form)

1. CHOICE OF LOUVER & FRAME

- Use samples panels, frames and color samples from the shop at home bag.
- Make sure that the chosen frame and louver size will function properly once installed into the opening.
- Ensure the chosen application will overcome any possible obstructions such as latches, cranks or windows that open into the room.
- Number of frame sides is based on the configuration and type of shutter. Four sided frames are recommended for most standard shutters.
- Frame extensions are not available for inside mount applications.

2. INSIDE MOUNT vs. OUTSIDE MOUNT

- Check for squareness by measuring the diagonal and/or use a sample panel and place at each corner.
- If the diagonal measurements are out more than 3/8”, then an outside mount is recommended.
- If the proper clearance is not available, an outside mount may be necessary for larger louvers and/or the Rear Tilt system.

3. MEASURE INSIDE WIDTH (Openings A, B & C)

Left Opening (A)

- Place one L Frame piece at the depth where the frame will be installed at the left location and one L Frame piece at the depth where the frame will be installed at left side of the left corner.
- Measure along an imaginary line that represents the front outer edge of the L Frame. Record this width to 1/16” on line one of the Standard Order Form.

Center Opening (B)

- Place one L Frame piece at the depth of the frame which will be installed at the right side of the left corner and one of the L Frame pieces at the depth the frame will be installed at the left side of the right corner.
- Measure along an imaginary line that represents the front outer edge of the L Frame. Record this width to 1/16” on the second line of the Standard Order Form.

Right Opening (C)

- Place one L Frame piece at the depth where the frame will be installed at the right side of the right corner and one L Frame piece at the depth of the frame which will be installed at the right location.
- Measure along an imaginary line that represents the front outer edge of the L Frame. Record this width to 1/16” on the third line of the Standard Order Form.

4. MEASURE INSIDE HEIGHT (Openings A, B & C)

- Record the smallest measurement for the heights in opening A, B and C to 1/16”.
- Height measurement for all panels must be the same.
- Panel heights under 36” may be ordered with optional 2” rails. The 4” rails are standard unless specified otherwise.

5. DIVIDER RAILS

- Measure from the bottom of the sill to the middle of the divider rail location.
- One divider rail is required for panels over 66” in height with a maximum 66” between the middle of the divider rail and either top or bottom rail.
- Two divider rails are required for panels over 96” in height with a maximum 66” between any two rails.
- Refer to Page D4 for additional divider rail measuring instructions.

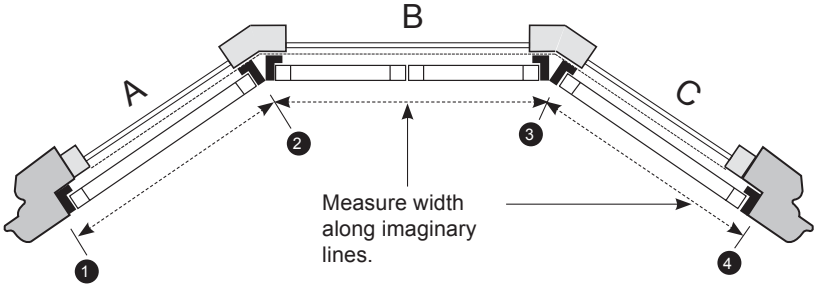

Outside Mount with Three Adjacent L Frames (use Standard Order Form)

1. **CHOICE OF LOUVER & FRAME**
   - Check for squareness by measuring the diagonal and/or use a sample panel and place at each corner.
   - Use sample panels, frames and color samples from the shop at home bag.
   - Make sure that the chosen frame and louver size will function properly once installed into the opening.
   - Ensure the chosen application will overcome any possible obstructions such as latches, cranks or windows that open into the room.
   - The appropriate frame will be affected by the mount type, depth clearance, existing trim, etc.
   - Number of frame sides is based on the configuration and type of shutter. Four sided frames are recommended for most standard shutters.
   - Specify the number of L Frame extensions required for proper louver operation.

2. **MEASURE INSIDE WIDTH (Openings A, B & C)**

   Left Opening (A)
   - Place one piece of L Frame on the left side of opening where the frame will be installed. Using a second piece of frame, place it on the rightside of Opening A (or on the left side of Angle 1).
   - Measure along an imaginary line that represents the front outer edge of the frame. Record this width to 1/16” on line one on a Standard Order Form.

   Center Opening (B)
   - Place one piece of L Frame on the left side of Opening B (or on the right side of Angle 1). Place second frame piece on the right side of Opening B (or on the left side of Angle 2).
   - Measure along an imaginary line that represents the front outer edge of the frame. Record this width to 1/16” on a second line on a Standard Order Form.

   Right Opening (C)
   - Place one piece of L Frame on the left side of Opening C (or on the right side of Angle 2). Place second frame piece on the right side of Opening C where the frame will be installed.
   - Measure along an imaginary line that represents the front outer edge of the frame. Record width measurement to 1/16” on a third line on a Regular Order Form.

3. **MEASURE INSIDE HEIGHT (Openings A, B & C)**
   - Record the largest measurement for the heights in opening A, B and C to 1/16”.
   - Height measurement for all panels must be the same.
   - Panel heights under 36” may be ordered with optional 2” rails. The 4” rails are standard unless specified otherwise

4. **DIVIDER RAILS**
   - Measure from the bottom of the sill to the middle of the divider rail location.
   - One divider rail is required for panels over 66” in height with a maximum 66” between the middle of the divider rail and either top or bottom rail.
   - Two divider rails are required for panels over 96” in height with a maximum 66” between any two rails.
   - Refer to Page D4 for additional divider rail measuring instructions.

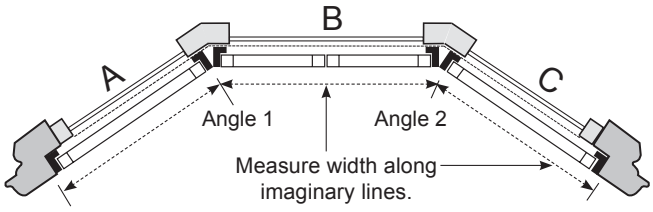

Outside Mount with Two Sided Frame
L Frame, S Frame or Casing Frame (use Standard Order Form)

1. CHOICE OF LOUVER & FRAME

- Check for squareness by measuring the diagonal and/or use a sample panel and place at each corner.
- Use samples panels, frames and color samples from the shop at home bag.
- Make sure that the chosen frame and louver size will function properly once installed into the opening.
- Ensure the chosen application will overcome any possible obstructions such as latches, cranks or windows that open into the room.
- Number of frame sides is based on the configuration and type of shutter. Four sided frames are recommended for most standard shutters.

2. MEASURE INSIDE WIDTH (Openings A, B & C)

Left Opening (A)

- Place chosen frame (with any extension if needed) into place at the extreme left side.
- Place T-Post at desired location at the left angle - perpendicular to center opening.
- Measure from the left front edge of the frame to the middle of the front of the left T-Post.
- Enter width to 1/16” into 1st T-Post position in the Uneven T-Post Distance box on the Standard Order Form.
- If using an inverted hinge configuration, there are no T-Posts, hence the distance is from left front edge of opening or frame to front right edge of where panel is to end. That measurement would be entered in the first box under the Uneven Panel Widths.

Center Opening (B)

- The measurement between T-Posts added to the measurements of the left opening are entered into the 2nd T-Post position under the Uneven T-Post distances box to 1/16” on the Standard Order Form.
- If using an inverted hinge configuration, there are no T-Posts, hence the distance of the center panels would be the exact sizes you wish the panels to be and entered in the 2nd and 3rd boxes under the Uneven Panel Widths.

Right Opening (C)

- Place chosen frame (with any extension if needed) at the extreme right side.
- Place T-Post at desired location at the right angle – perpendicular to the center opening.
- Measure from the middle of the front of the T-Post to the extreme right front of the frame or panel.
- The measurement of right opening added to the distance entered in the 2nd T-Post position distances box is the width measurement to be entered as the overall width to 1/16” on the Standard Order Form.
- If using an inverted hinge configuration, there are no T-Posts therefore the distance would be from the left front edge of the center opening to the front right edge where the panel or frame is to end. That measurement would be entered in the 4th box under the Uneven Panel Widths.

3. MEASURE INSIDE HEIGHT (Openings A, B & C)

- Measure height at left, middle, and right and record the smallest measurement to 1/8”.
- Height measurement for all panels must be the same.
- Panel heights under 36” may be ordered with optional 2” rails. The 4” rails are standard unless specified otherwise

4. DIVIDER RAILS

- Measure from the bottom of the sill to the middle of the divider rail location.
- One divider rail is required for panels over 66” in height with a maximum 66” between the middle of the divider rail and either top or bottom rail.
- Two divider rails are required for panels over 96” in height with a maximum 66” between any two rails.
- Refer to Page D4 for additional divider rail measuring instructions.

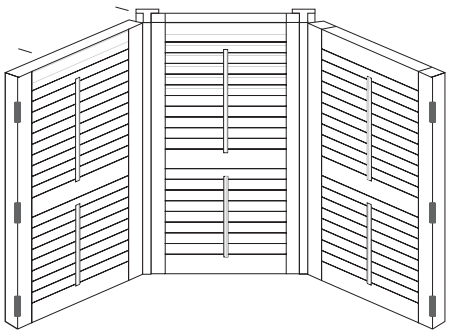

Outside Mount Compound Miter on Top of Trim
L Frame, S Frame or Casing Frame (use Bay Window Order Form)

1. CHOICE OF FRAME & MOUNT TYPE
- Use samples panels, frames and color samples from the shop at home bag.
- Make sure that the chosen frame and louver size will function properly once installed into the opening.
- The appropriate frame will be affected by the mount type, depth clearance, existing trim, etc.
- If the proper clearance is not available, an outside mount may be necessary for larger louvers and/or the Rear Tilt system (Clearview).
- Number of frame sides is based on the configuration and type of shutter. Four sided frames are recommended for most standard shutters.
- Specify the number of L Frame extensions required for proper louver operation.

2. MEASURE WIDTHS
- If the chosen frame can be mounted flush with the edge of the trim, then measure the widths A, B and C on top of trim in two places (top, bottom). Record the largest measurements to 1/16” onto a Bay Order Form.
- If the chosen frame extends past the edge of the trim, then measure the widths A, B, C on top of trim two places (top, bottom) and add the amount the chosen frame extends past the trim for each side. Record the largest measurements to 1/16” onto a Bay Order Form.

3. MEASURE HEIGHTS
- If the chosen frame can be mounted flush with the edge of the trim, then measure the height from out side of trim to outside of trim in three places (left, middle, right). Record the largest measurements to 1/16” onto a Bay Order Form.
- If the chosen frame extends past the edge of the trim, then measure the height from trim to trim in three places (left, middle, right) and add the mount the chosen frame extends past the trim for each side. Record the largest measurements to 1/16” onto a Bay Order Form.
- Panel heights under 36” may be ordered with optional 2” rails. The 4” rails are standard unless specified otherwise

4. DETERMINE THE ANGLES
- Using a protractor, measure both angles at points 1 and 2 at the top and bottom.
- If angles are not the same on the top and bottom, split the difference.

5. DIVIDER RAILS
- Measure from the bottom of the sill to the middle of the divider rail location.
- One divider rail is required for panels over 66” in height with a maximum 66” between the middle of the divider rail and either top or bottom rail.
- Two divider rails are required for panels over 96” in height with a maximum 66” between any two rails.
- Refer to Page D4 for additional divider rail measuring instructions.

6. SURCHARGE IS APPLICABLE
- Compound Miter Bay Window will incur a surcharge.

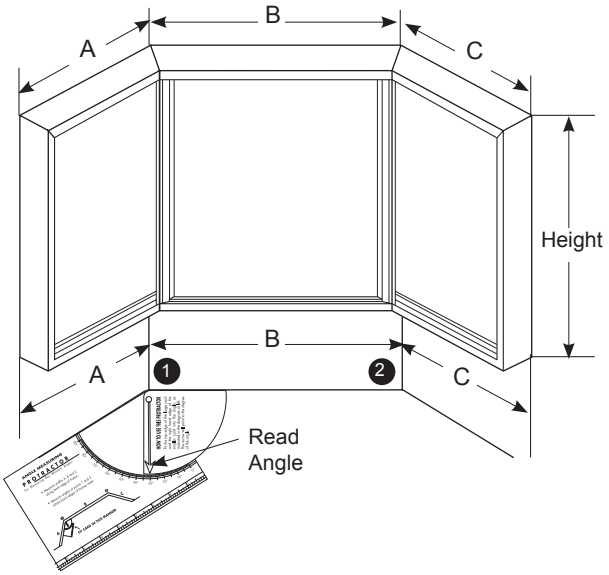

Fit the top edge of the large card and the right hand edge of the smaller card into the angle, as indicated in the diagram at left. The arrow will point to the degree of the angle.

Outside Mount Compound Miter without Trim
L Frame, S Frame or Casing Frame (use Bay Window Order Form)

1. CHOICE OF FRAME & MOUNT TYPE
- Use samples panels, frames and color samples from the shop at home bag.
- Make sure that the chosen frame and louver size will function properly once installed into the opening.
- The appropriate frame will be affected by the mount type, depth clearance, existing trim, etc.
- If the diagonal measurements of each opening are out more than 3/8”, then an outside mount is recommended.
- If the proper clearance is not available, an outside mount may be necessary for larger louvers and/or the Rear Tilt system.
- Number of frame sides is based on the configuration and type of shutter. Four sided frames are recommended for most standard shutters.
- Specify the number of L Frame extensions required for proper louver operation.

2. MEASURE WIDTHS
- Measure the inside widths A, B and C in two places top & bottom.
- Take the largest measurements to 1/16” and add 1 3/8” per frame side for L Frame, 2” per frame side for S Frame or 2 3/8” per frame side for Casing Frame.

3. MEASURE HEIGHTS
- Measure the inside height in three places (left, middle and right).
- Take the largest measurements to 1/16” and add 1 3/8” per frame side for L Frame, 2” per frame side for S Frame or 2 3/8” per frame side for Casing Frame.
- Panel heights under 36” may be ordered with optional 2” rails. The 4” rails are standard unless specified otherwise.

4. DETERMINE THE ANGLES
- Using a protractor, measure both angles at points 1 and 2 at the top and bottom.
- If angles are not the same on the top and bottom, split the difference.

5. DIVIDER RAILS
- Measure from the bottom of the sill to the middle of the divider rail location.
- One divider rail is required for panels over 66” in height with a maximum 66” between the middle of the divider rail and either top or bottom rail.
- Two divider rails are required for panels over 96” in height with a maximum 66” between any two rails.
- Refer to Page D4 for additional divider rail measuring instructions.

6. SURCHARGE IS APPLICABLE
- Compound Miter Bay Window will incur a surcharge.

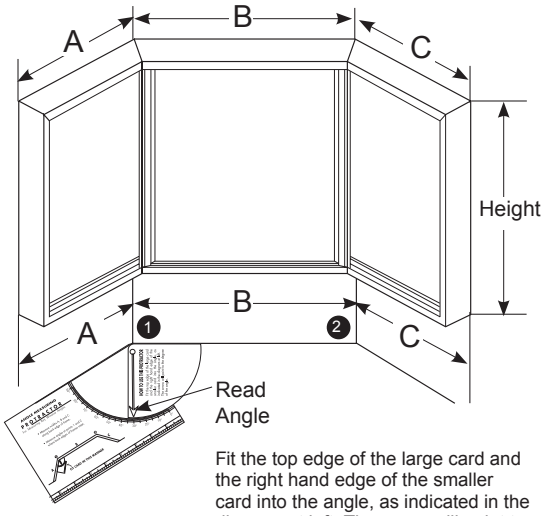

Fit the top edge of the large card and the right hand edge of the smaller card into the angle, as indicated in the diagram at left. The arrow will point to the degree of the angle.

Inside Mount Compound Miter - Z-Frame, Deluxe Trim Frame, Bullnose Z Frame, Trim Frame or L Frame (use Bow Window Order Form)

1. CHOICE OF FRAME & MOUNT TYPE
- Use samples panels, frames and color samples from the shop at home bag.
- Make sure that the chosen frame and louver size will function properly once installed into the opening.
- The appropriate frame will be affected by the mount type, depth clearance, existing trim, etc.
- If the diagonal measurements of each opening are out more than 3/8”, then an outside mount is recommended.
- If the proper clearance is not available, an outside mount may be necessary for larger louvers and/or the Rear Tilt system (Clearview).
- Number of frame sides is based on the configuration and type of shutter. Four sided frames are recommended for most standard shutters.
- Frame Extensions are not available for inside mount applications.

2. DETERMINE MOUNTING PROJECTION
- Place chosen frame against the left sill of the “A” opening and make a 3” pencil mark at the back of the frame from the inside jamb.
- Slide the frame along the sill to the right side of the “A” opening. Make a 3” pencil mark at the back of the frame to the right side.
- Follow the same process for openings B & C.
- Use a flat edge to extend the lines at each corner until they intersect.
- Repeat the process for the top sill.

3. MEASURE INSIDE WIDTHS (A, B, C, D, & E)
- Measure “A” width - from the pencil mark on the left side to the intersection of lines at angle 1 at both bottom and top. Record the narrowest measurement to the 1/16”.
- Measure widths B, C, & D openings from the intersection of lines at each angle to the next intersection of lines at both bottom & top. Record the narrowest measurement to 1/16”.
- Measure “E” widths - from intersection of lines at angle 4 to the right extreme of the pencil mark on the right side at both bottom and top. Record the narrowest measurement to 1/16”.

4. MEASURE INSIDE HEIGHTS (A, B, C, D, & E)
- Record the smallest measurement to 1/16”.
- Height measurement for all panels must be the same height.
- Panel heights under 36” may be ordered with optional 2” rails. The 4” rails are standard unless specified otherwise

5. DETERMINE THE ANGLES
- Using a protractor, measure both angles at points 1 and 2 at the top and bottom.
- If angles are not the same on the top and bottom, split the difference.

6. DIVIDER RAILS
- Measure from the bottom of the sill to the middle of the divider rail location.
- One divider rail is required for panels over 66” in height with a maximum 66” between the middle of the divider rail and either top or bottom rail.
- Two divider rails are required for panels over 96” in height with a maximum 66” between any two rails.
- Refer to Page D4 for additional divider rail measuring instructions.

7. SURCHARGE IS APPLICABLE
- Compound Miter Bay Window will incur a surcharge.

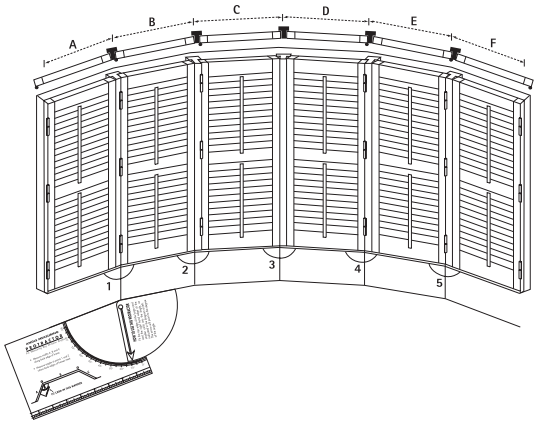

Inside Mount with Two Sided Frame or No Frame - L Frame, Z Frame, Trim Frame, Bullnose Z Frame, Deluxe Trim Frame, or No Frame (use Standard Order Form)

1. CHOICE OF LOUVER & FRAME

- Use samples panels, frames and color samples from the shop at home bag.
- Make sure that the chosen frame and louver size will function properly once installed into the opening.
- Ensure the chosen application will overcome any possible obstructions such as latches, cranks or windows that open into the room.
- Number of frame sides is based on the configuration and type of shutter. Four sided frames are recommended for most standard shutters.

2. INSIDE MOUNT vs. OUTSIDE MOUNT

- Check for squareness by measuring the diagonal and/or use a sample panel and place at each corner.
- If the diagonal measurements are not identical, a framed application is recommended for inside mounts. An unframed application will result in uneven light gaps.
- If the diagonal measurements are out more than 3/8", then an outside mount is recommended.
- If the proper clearance is not available, an outside mount may be necessary for larger louvers and/or the Rear Tilt system (Clearview).

3. MEASURE INSIDE WIDTHS (A, B, C, D, & E)

Left Opening

- Place chosen frame with desired extensions or panel only to the left jamb of the left window on the sill.
- Take a T-Post and place it at the desired location at the first angle. Mark with a pencil the center of the first T-Post.
- Measure from the left front outer edge of the frame or panel only to the center of left T-Post at the front. Enter that measurement to 1/16" in the 1st T-post position under the Uneven T-Post Distances Box.

Center Openings

- Place T-Posts into position at each corner and mark off the center of each T-Post.
- Measure between the two T-Posts in the second opening. Add it to the number in the 1st T-Post position under the Uneven T-Post Distances box. Place the added number to 1/16" in the 2nd box of the Uneven T-Post Positions.
- Measure between the two T-Posts in the third opening. Add it to the number in the 2nd T-Post position under the Uneven T-Post Distances box. Place the added number to 1/16"in the 3rd box of the Uneven T-Post Positions.
- Measure between the two T-Posts in the fourth opening. Add it to the measurement in the 3rd T-Post position under the Uneven T-Post Distances box. Place the added number to 1/16" in the 4th box of the Uneven T-Post Postitions.

Right Opening

- Place chosen frame or panel only to the right jamb of the right window on the sill.
- Measure from the center of the right T-Post to the right front outer edge of the chosen frame. That measurement added to the measurement in the 4th box under Uneven T-Post Positions is the over all width placed in the width box to 1/16" on the Regular Order From.

4. MEASURE INSIDE HEIGHTS (A, B, C, D, & E)

- Record the smallest measurement to 1/16".
- Height measurement for all panels must be the same height.
- Panel heights under 36" may be ordered with optional 2" rails. The 4" rails are standard unless specified otherwise.

5. DIVIDER RAILS

- Measure from the bottom of the sill to the middle of the divider rail location.
- One divider rail is required for panels over 66" in height with a maximum 66" between the middle of the divider rail and either top or bottom rail.
- Two divider rails are required for panels over 96" in height with a maximum 66" between any two rails.
- Refer to Page D4 for additional divider rail measuring instructions.

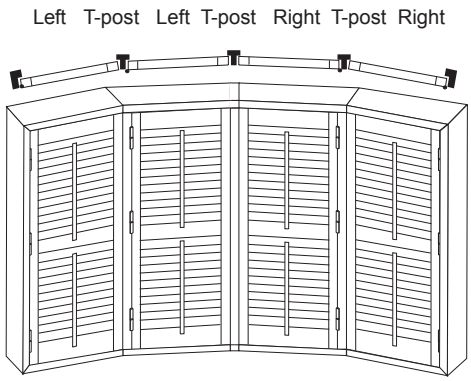

Outside Mount with Two Sided Frame - L Frame, S Frame or Casing Frame

(use Standard Order Form)

1. **CHOICE OF LOUVER & FRAME**
   - Check for squareness by measuring the diagonal and/or use a sample panel and place at each corner.
   - Use samples panels, frames and color sample from the shop at home bag.
   - Make sure that the chosen frame and louver size will function properly once installed into the opening.
   - Ensure the chosen application will overcome any possible obstructions such as latches, cranks or windows that open into the room.

2. **MEASURE OUTSIDE WIDTHS (A, B, C, D, & E)**

   Left Opening
   - Place chosen frame with desired extensions into place outside the left window.
   - Take a T-Post and place it at the desired location at the first angle. Mark with a pencil the center of the first T-Post.
   - Measure from the left front outer edge of the frame to the center of left T-Post at the front. Enter that measurement to 1/16” in the 1st T-post position under the Uneven T-Post Distances Box.

   Center Openings
   - Place T-Posts into position at each corner and mark off the center of each T-Post.
   - Measure between the two T-Posts in the second opening. Add it to the number in the 1st T-Post position under the Uneven T-Post Distances box. Place the added number to 1/16” in the 2nd box of the Uneven T-Post Distances Box.
   - Measure between the two T-Posts in the third opening. Add it to the number in the 2nd T-Post position under the Uneven T-Post Distances box. Place the added number to 1/16” in the 3rd box of the Uneven T-Post Distances Box.
   - Measure between the two T-Posts in the fourth opening. Add it to the measurement in the 3rd T- Post position under the Uneven T-Post Distances box. Place the added number to 1/16” in the 4th box of the Uneven T-Post Distances Box.

   Right Opening
   - Place chosen frame with desired extensions into place outside the right window.
   - Measure from the center of the right T-Post to the right front outer edge of the chosen frame. That measurement added to the measurement in the 4th box under Uneven T-Post Distances Box is the over all width placed in the width box to 1/16” on the Regular Order Form.

3. **MEASURE INSIDE HEIGHTS (A, B, C, D, & E)**
   - Record the smallest measurement to 1/16”.
   - Height measurement for all panels must be the same height.
   - Panel heights under 36” may be ordered with optional 2” rails. The 4” rails are standard unless specified otherwise

4. **DIVIDER RAILS**
   - Measure from the bottom of the sill to the middle of the divider rail location.
   - One divider rail is required for panels over 66” in height with a maximum 66” between the middle of the divider rail and either top or bottom rail.
   - Two divider rails are required for panels over 96” in height with a maximum 66” between any two rails.
   - Refer to Page D4 for additional divider rail measuring instructions.

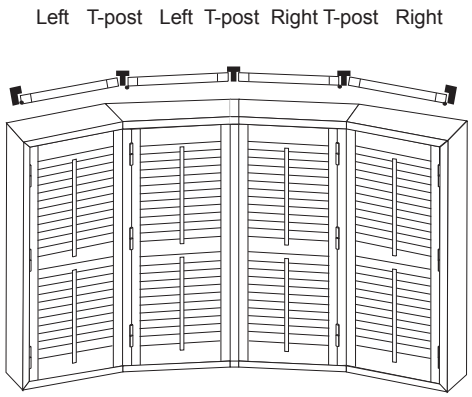

Outside Mount Compound Miter on Top of Trim - L Frame, S Frame or Casing Frame (use Bow Window Order Form)

1. **CHOICE OF FRAME & MOUNT TYPE**
   - Use samples panels, frames and color samples from the shop at home bag.
   - Make sure that the chosen frame and louver size will function properly once installed into the opening.
   - The appropriate frame will be affected by the mount type, depth clearance, existing trim, etc.
   - Specify inverted frame, if a three sided frame is being used and the non-framed side is to be located at the top.
   - If the proper clearance is not available, an outside mount may be necessary for larger louvers and/or the Rear Tilt system (Clearview).
   - Number of frame sides is based on the configuration and type of shutter. Four sided frames are recommended for most standard shutters.
   - Specify the number of L Frame extensions required for proper louver operation.

2. **MEASURE INSIDE WIDTHS (A, B, C, D, & E)**
   - If the chosen frame can be mounted flush with the edge of the trim, then measure the widths on top of trim in two places (top & bottom). Record the largest measurement to 1/16” onto a Bow Order Form.
   - If the chosen frame extends past the edge of the trim, then measure the widths on top of trim in two places (top & bottom) and add the amount the chosen frame extends past the trim for each side. Record the largest measurement to 1/16” onto a Bow Order Form.

3. **MEASURE INSIDE HEIGHTS (A, B, C, D, & E)**
   - If the chosen frame can be mounted flush with the edge of the trim, then measure the height from outside of trim to out side of trim in three places (left, middle & right). Record the largest measurements to 1/16” onto a Bow Order Form.
   - Panel heights under 36” may be ordered with optional 2” rails. The 4” rails are standard unless specified otherwise.

4. **DETERMINE THE ANGLES**
   - Using a protractor, measure both angles at points 1 and 2 at the top and bottom.
   - If angles are not the same on the top and bottom, split the difference.

5. **DIVIDER RAILS**
   - Measure from the bottom of the sill to the middle of the divider rail location.
   - One divider rail is required for panels over 66” in height with a maximum 66” between the middle of the divider rail and either top or bottom rail.
   - Two divider rails are required for panels over 96” in height with a maximum 66” between any two rails.
   - Refer to Page D4 for additional divider rail measuring instructions.

6. **SURCHARGE IS APPLICABLE**
   - Compound Miter Bay Window will incur a surcharge.

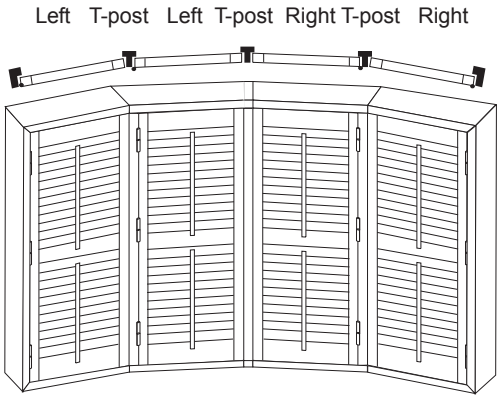

Outside Mount Compound Miter without Trim - L Frame, S Frame or Casing Frame (use Bow Window Order Form)

1. **CHOICE OF FRAME & MOUNT TYPE**
   - Use samples panels, frames and color samples from the shop at home bag.
   - Make sure that the chosen frame and louver size will function properly once installed into the opening.
   - The appropriate frame will be affected by the mount type, depth clearance, existing trim, etc.
   - Specify inverted frame, if a three sided frame is being used and the non-framed side is to be located at the top.
   - If the proper clearance is not available, an outside mount may be necessary for larger louvers and/or the Rear Tilt system (Clearview).
   - Number of frame sides is based on the configuration and type of shutter. Four sided frames are recommended for most standard shutters.
   - Specify the number of L Frame extensions required for proper louver operation.

2. **MEASURE INSIDE WIDTHS (A, B, C, D, & E)**
   - Measure widths in two places (top & bottom).
   - Take the largest measurements to 1/16" and add 1 3/8" per frame side for L Frame, 2" per frame side for S Frame or 2 11/16" per frame side for Casing Frame.

3. **MEASURE INSIDE HEIGHTS (A, B, C, D, & E)**
   - Measure the inside height at each opening.
   - Take the largest measurements to 1/8" and add 1 3/8" per frame side for L Frame, 2" per frame side for S Frame or 2 11/16" per frame side for Casing Frame.
   - Panel heights under 36" may be ordered with optional 2" rails. The 4" rails are standard unless specified otherwise.

4. **DETERMINE THE ANGLES**
   - Using a protractor, measure both angles at points 1 and 2 at the top and bottom.
   - If angles are not the same on the top and bottom, split the difference.

5. **DIVIDER RAILS**
   - Measure from the bottom of the sill to the middle of the divider rail location.
   - One divider rail is required for panels over 66" in height with a maximum 66" between the middle of the divider rail and either top or bottom rail.
   - Two divider rails are required for panels over 96" in height with a maximum 66" between any two rails.
   - Refer to Page D4 for additional divider rail measuring instructions.

6. **SURCHARGE IS APPLICABLE**
   - Compound Miter Bay Window will incur a surcharge.

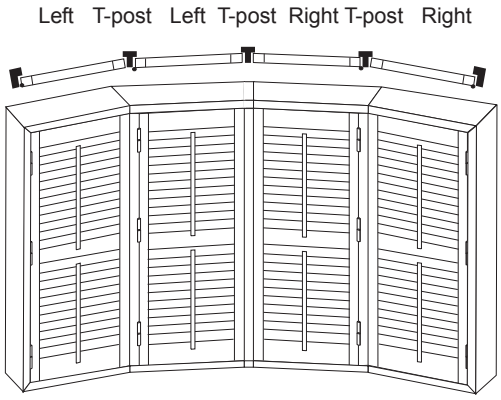

Inside Mount - Z-Frame, Trim Frame, Bullnose Z Frame, Deluxe Trim Frame, L Frame or without Frame (use Standard Order Form)

1. CHOICE OF LOUVER & FRAME

- Use samples panels, frames and color samples from the shop at home bag.
- Make sure that the chosen frame and louver size will function properly once installed into the opening.
- Ensure the chosen application will overcome any possible obstructions such as latches, cranks or windows that open into the room.
- The appropriate frame will be affected by the mount type, depth clearance, existing trim, etc.
- Number of frame sides is based on the configuration and type of shutter. A Patio Door does not include a bottom frame, so specify either 2 or 3 frame sides. If a four sided frame is needed, then it should be ordered as a standard shutter not a P4D.
- Four sided frames with Z Frame, Trim Frame, Bullnose Z Frame, or Deluxe Trim Frame should be specified with Sill Frame at the bottom. This should be ordered as a P4 – LLRR and not as a P4D – LLRR.

2. INSIDE MOUNT vs. OUTSIDE MOUNT

- Check for squareness by measuring the diagonal and/or use a sample panel and place at each corner.
- If the diagonal measurements are out more than 3/8”, then an outside mount is recommended.
- If the proper clearance is not available, an outside mount may be necessary for larger louvers and/or the Rear Tilt System (Clearview).

3. MEASURE INSIDE WIDTH

- Measure the width in three places (top, middle & bottom) and record the smallest measurement to 1/16”.

4. MEASURE INSIDE HEIGHT

- Measure the height in three places (left, middle and right) and record the smallest measurements to 1/16”.
- Panel heights under 36” may be ordered with optional 2” rails. The 4” rails are standard unless specified otherwise.

5. DIVIDER RAILS

- Measure from the bottom of the sill to the middle of the divider rail location.
- One divider rail is required for panels over 66” in height with a maximum 66” between the middle of the divider rail and either top or bottom rail.
- Two divider rails are required for panels over 96” in height with a maximum 66” between any two rails.
- Refer to Page D4 for additional divider rail measuring instructions.

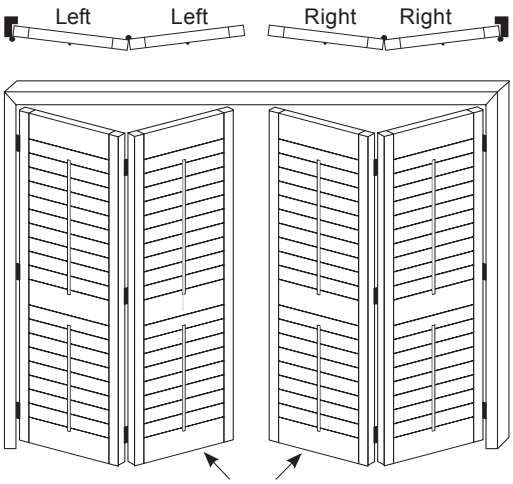

Patio door shutter will have 5/8” clearance along floor.

Note: Panel drop and panel flare may occur on any 3 sided frame. For best results order with an optional 4” Z Sill Frame and Z Sill Frame Caps. Alternatively, can be ordered as a standard window 4 sided with a Sill Frame.

Outside Mount - L Frame, S Frame or Casing Frame (use Standard Order Form)

1. CHOICE OF LOUVER & FRAME

- Check for squareness by measuring the diagonal and/or use a sample panel and place at each corner.
- Use samples panels, frames and color samples from the shop at home bag.
- Make sure that the chosen frame and louver size will function properly once installed into the opening.
- Ensure the chosen application will overcome any possible obstructions such as latches, cranks or windows that open into the room.
- The appropriate frame will be affected by the mount type, depth clearance, existing trim, etc.
- The minimum width of trim required for Casing Frame is 2 11/16”, L Frame is 1 3/8”. If the trim width is less than the frame width, then the frame should extended outside of the trim, not inside the opening.
- Number of frame sides is based on the configuration and type of shutter. Four sided frames are recommended for most standard shutters.
- Depth clearance and obstructions can prevent louvers from operating properly. In order to overcome these obstacles, add the necessary frame extensions to the appropriate frame.
- Frame Extensions are available for outside mount applications. Up to (3) 1/2” extensions can be added to either frame for greater projection.

2. MEASURE OUTSIDE WIDTH

- If the chosen frame can be mounted flush with the edge of the trim, then measure the width from outside of trim to outside of trim in three places (top, middle & bottom). Record the largest measurement to the 1/16”.
- If the opening has no trim, then measure the inside width in three places (top, middle & bottom). Take the largest measurement to the 1/16” and add 1 3/8” per frame side for L Frame, 2” per frame side for S Frame or 2 11/16” per frame side for Casing Frame.

3. MEASURE OUTSIDE HEIGHT

- If the chosen frame can be mounted flush with the edge of the trim, then measure the height from outside of trim to the floor in three places (left, middle & right). Record the largest measurement to 1/16”.
- If the opening has no trim, them measure the inside height in three places (left, middle & right). Take the largest measurement to the 1/16” and add 1 3/8” per frame side for L Frame, 2” per frame side for S Frame or 2 11/16” per frame side for Casing Frame.
- Panel heights under 36” may be ordered with optional 2” rails. The 4” rails are standard unless specified otherwise

4. DIVIDER RAILS

- Measure from the bottom of the sill to the middle of the divider rail location.
- One divider rail is required for panels over 66” in height with a maximum 66” between the middle of the divider rail and either top or bottom rail.
- Two divider rails are required for panels over 96” in height with a maximum 66” between any two rails.
- Refer to Page D4 for additional divider rail measuring instructions.

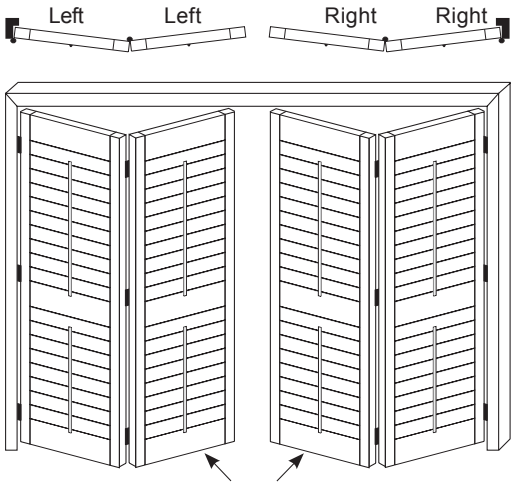

Patio door shutter will have 5/8” clearance along floor.

Note: A single panel over 28” wide or Bi-Fold panels over 36“ are not recommended to be ordered as a door application. Panel drop and panel flare may occur on any 3 sided frame. For best results order with an optional 4” Z Sill Frame and Z Sill Frame Caps. Alternatively, can be ordered as a standard window 4 sided with a Sill Frame (refer to photos on page E18).

EXAMPLE - 4-Sided Z Frame with Sill Frame on Patio Door

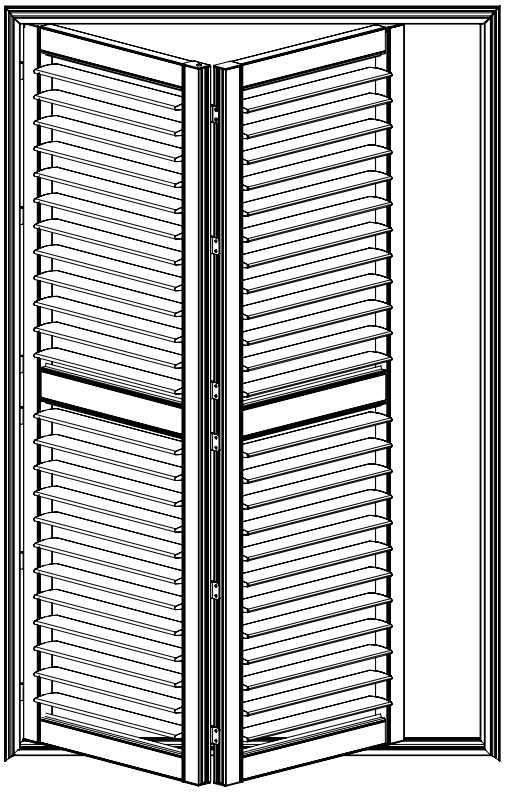

EXAMPLE - 3-Sided Frame with Sill Frame on Patio Door

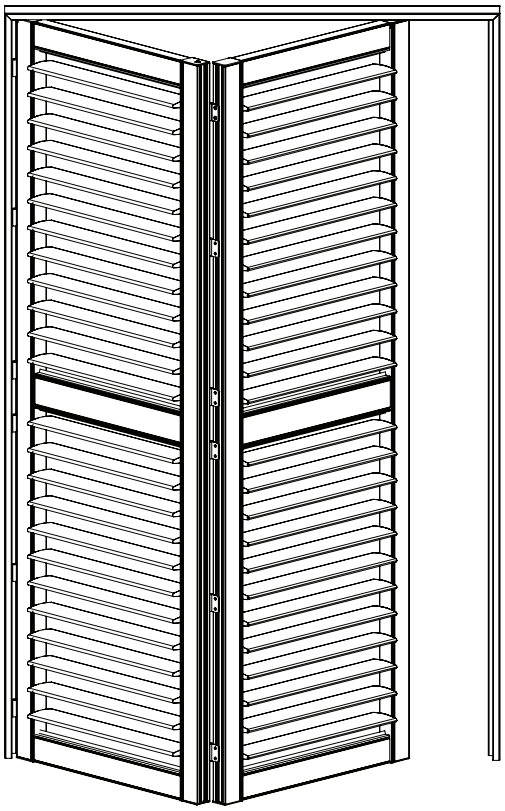

G

FRENCH DOOR SHUTTERS

French Door Cut-Out Diagram

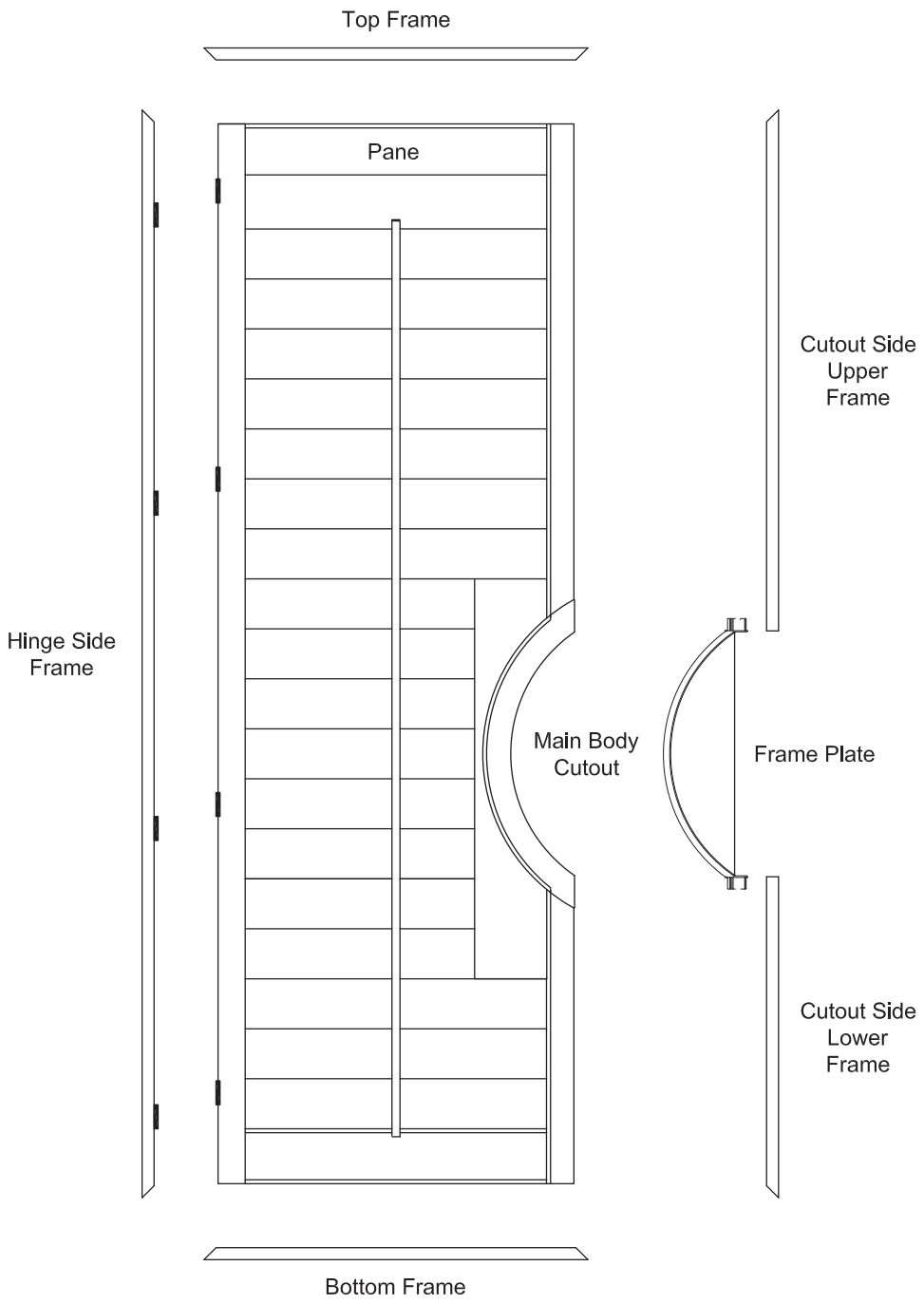

Features:

- Available in 2 1/2”, 3 1/2” and 4 1/2” louver sizes
- 4-sided L-frame only
- Optional divider rail centered on cutout
- Shutter may grow in height in order to ensure the cutout is located properly on the door handle
- Multiple frame plates to work with L-frame and multiple extensions

Dimensions:

- L-frame plate (front edge) 15 1/8”
- Main body (overall height varies based on configuration)
- Main body (width) 4 1/2”

French Door with Cutout (No Divider Rail)

P1FD-L

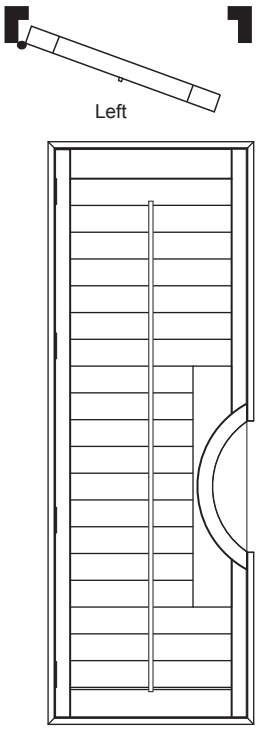

P1FD-R

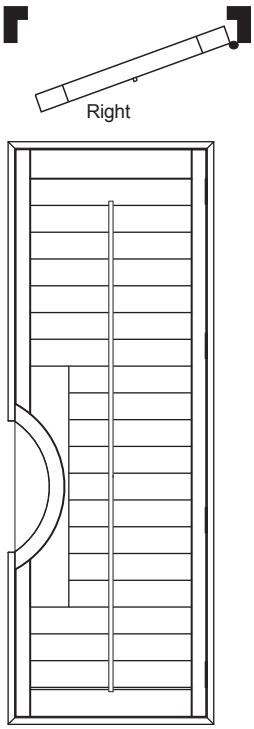

	2 1/2”	3 1/2”	4 1/2”
• Minimum Width:	18”	18”	18”
• Maximum Width:	36”	36”	36”
• Minimum Height:	36”	38”	40”
• Maximum Height:	96”	96”	96”
• Minimum Cutout Height:	17 ¾”	18 ¾”	19 ¾”

Notes: 4-sided frame only; Minimum Cutout Height measured from bottom of shutter frame

French Door with Cutout (With Divider Rail)

P1FD-L

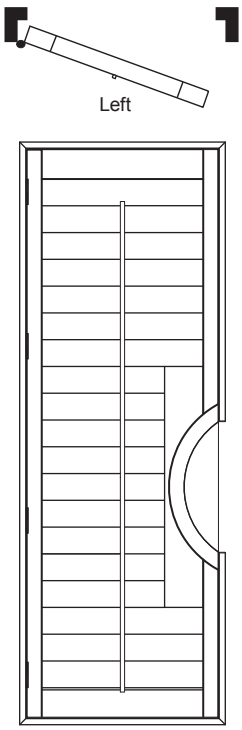

P1FD-R

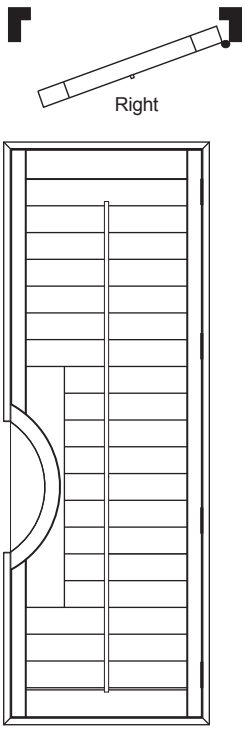

	2 1/2”	3 1/2”	4 1/2”
• Minimum Width:	18”	18”	18”
• Maximum Width:	36”	36”	36”
• Minimum Height:	36”	38”	40”
• Maximum Height:	96”	96”	96”
• Minimum Cutout Height:	17 ¾”	18 ¾”	19 ¾”

Notes:
- 4-sided frame only
- Minimum Cutout Height measured from bottom of shutter frame
- Divider rail must be in center of cut-out

Outside Mount French Door With Cutout

Depth Clearance (No Molding Around Glass)

With Tilt Bar, Gear
2 1/2” Louver = (0) L Frame Extensions Required

With Rear Tilt (Clearview)
2 1/2” Louver = (1) L Frame Extension Required

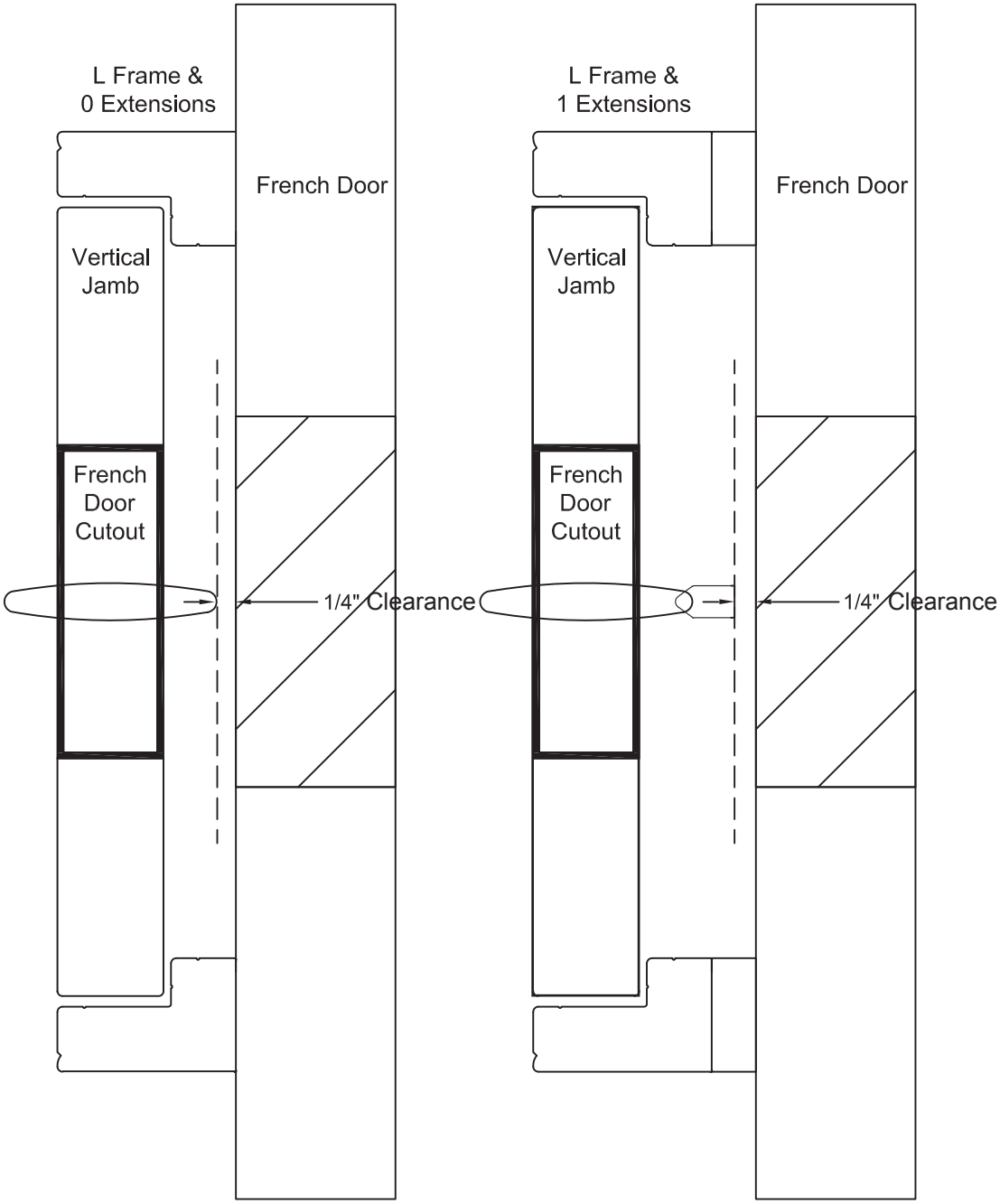

Outside Mount French Door With Cutout

Depth Clearance (With Molding Around Glass)

With Tilt Bar, Gear
2 1/2” Louver = (1) L Frame Extension Required

With Rear Tilt (Clearview)
2 1/2” Louver = (2) L Frame Extensions Required

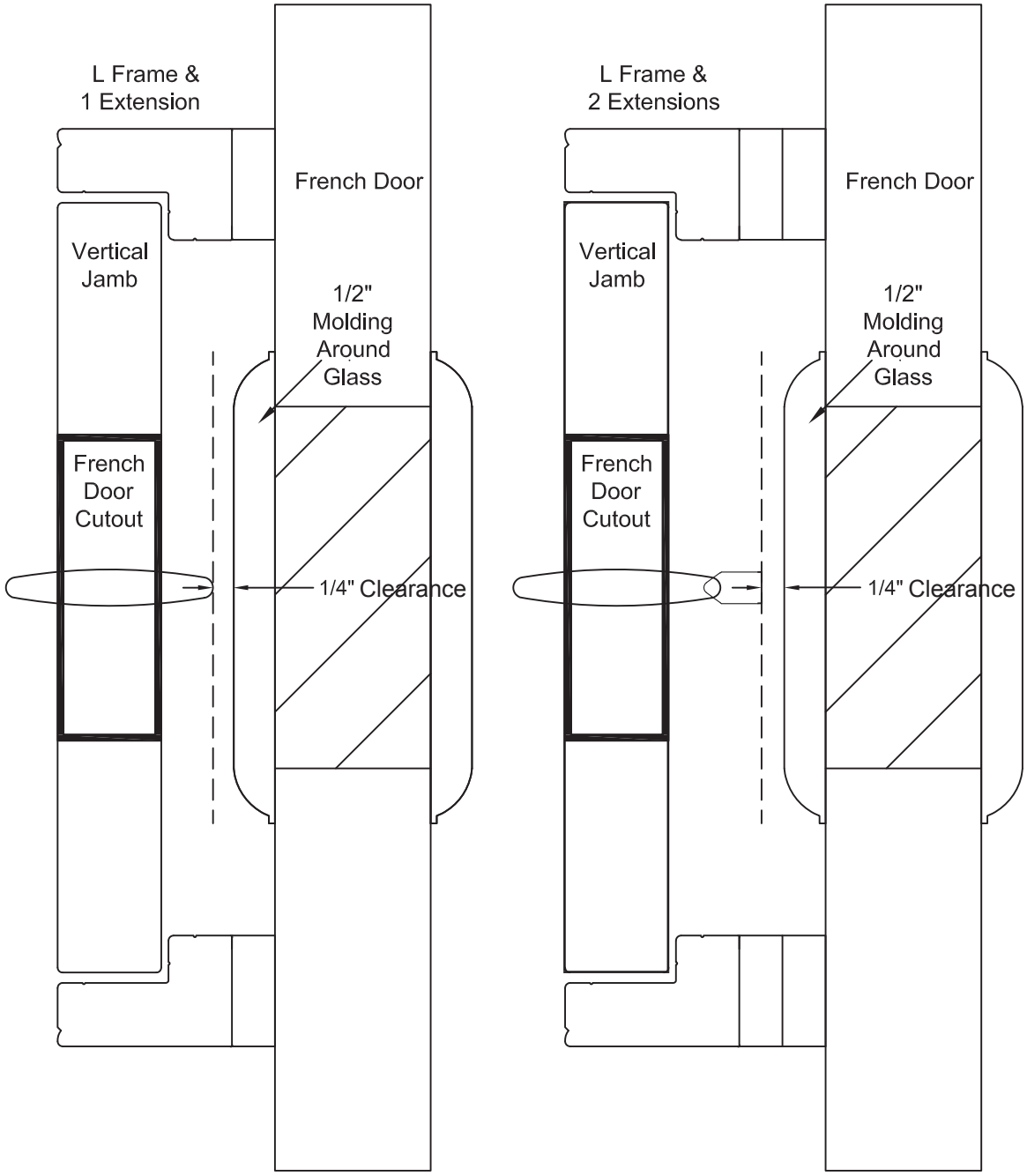

Outside Mount French Door With Cutout

Depth Clearance (No Molding Around Glass)
With Tilt Bar, Gear
3 1/2” Louver = (1) L Frame Extension Required

With Rear Tilt (Clearview)
3 1/2” Louver = (2) L Frame Extensions Required

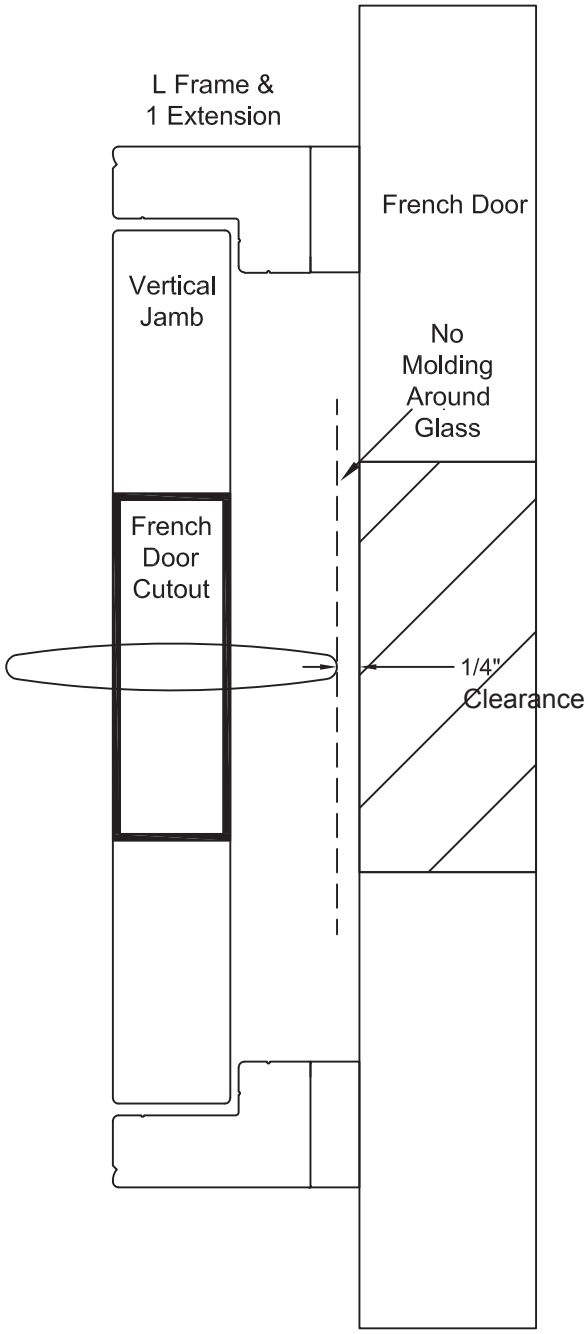

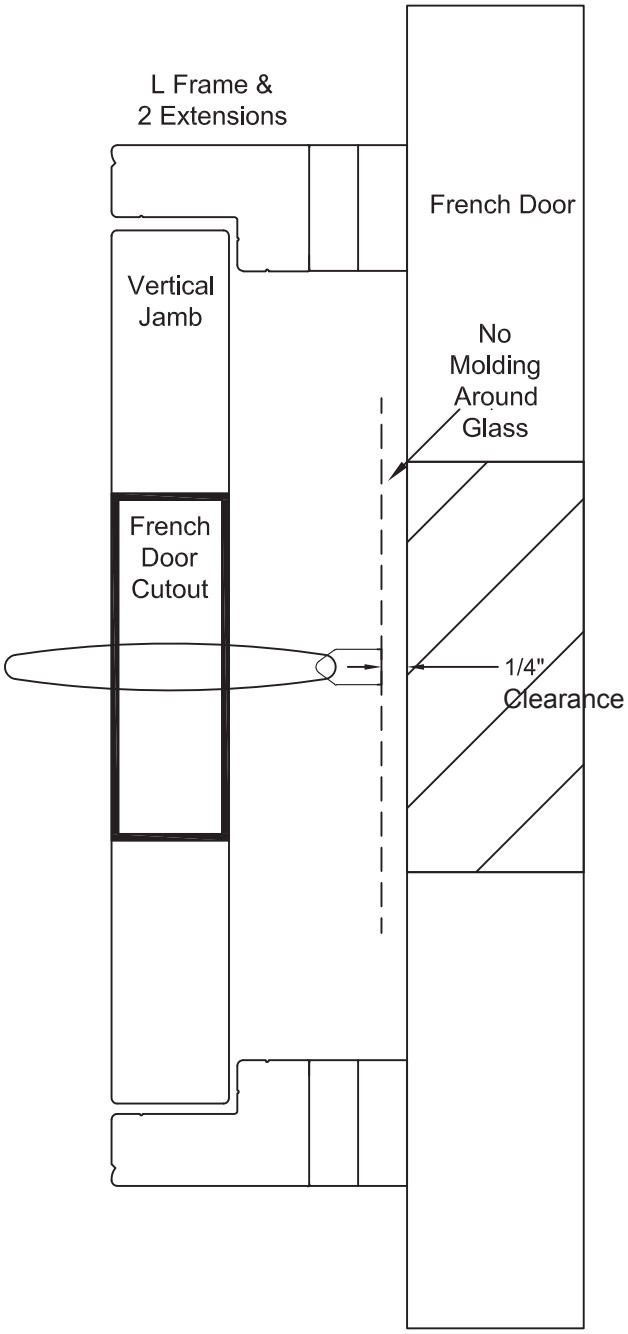

Outside Mount French Door With Cutout

Depth Clearance (With Molding Around Glass)
With Tilt Bar, Gear
3 1/2” Louver = (2) L Frame Extension Required

With Rear Tilt (Clearview)
3 1/2” Louver = (3) L Frame Extensions Required

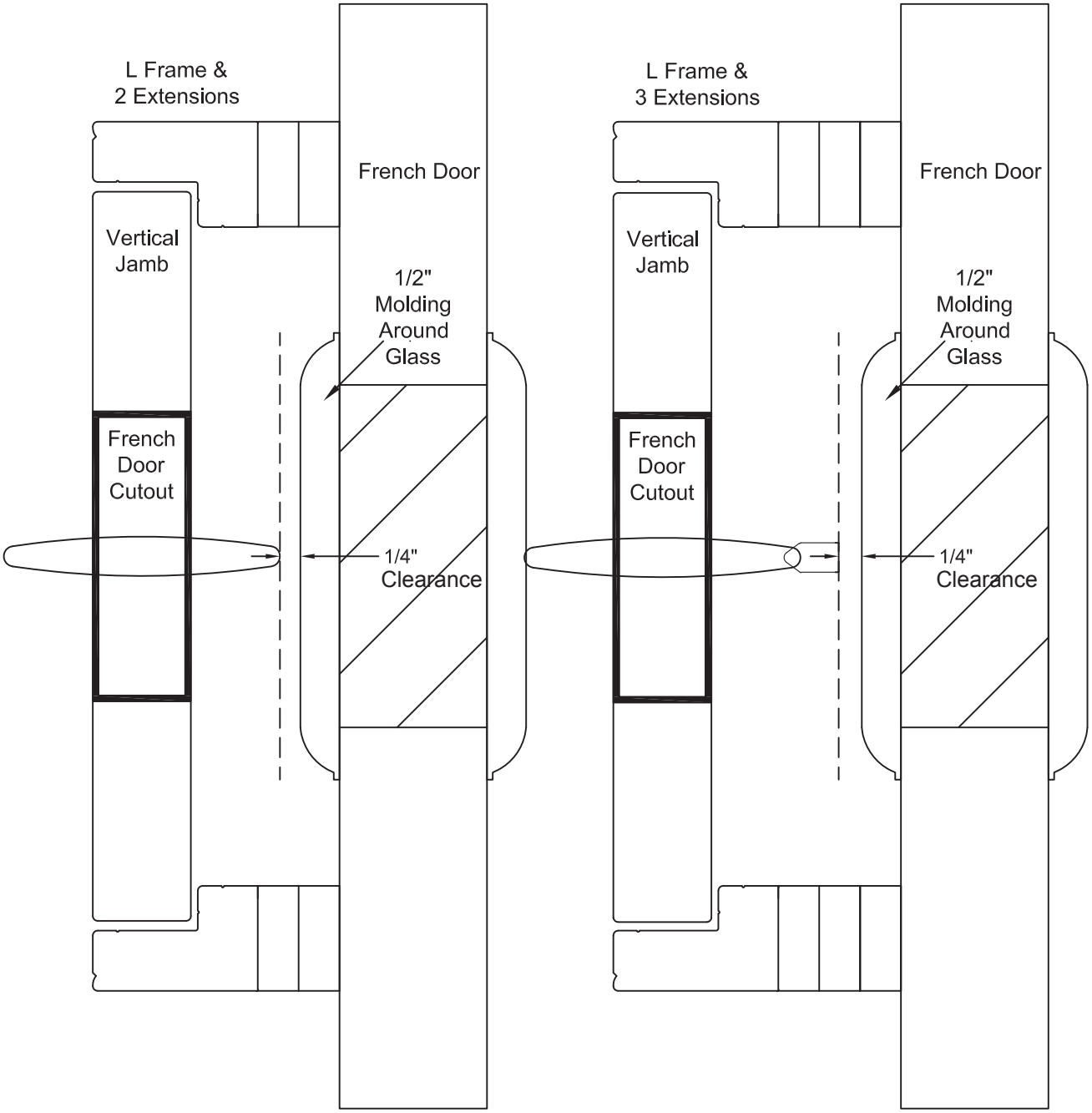

Outside Mount French Door With Cutout

Depth Clearance (No Molding Around Glass)
With Tilt Bar, Gear
4 1/2” Louver = (2) L Frame Extension Required

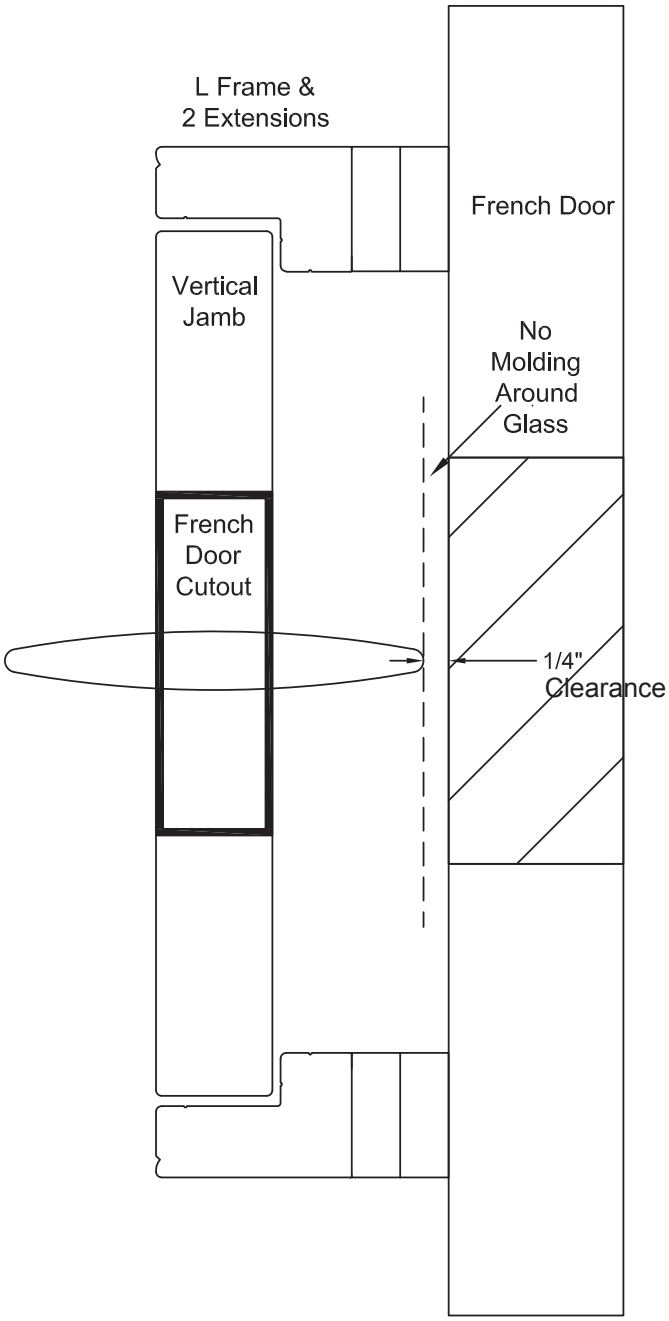

With Rear Tilt (Clearview)
4 1/2” Louver = (3) L Frame Extensions Required

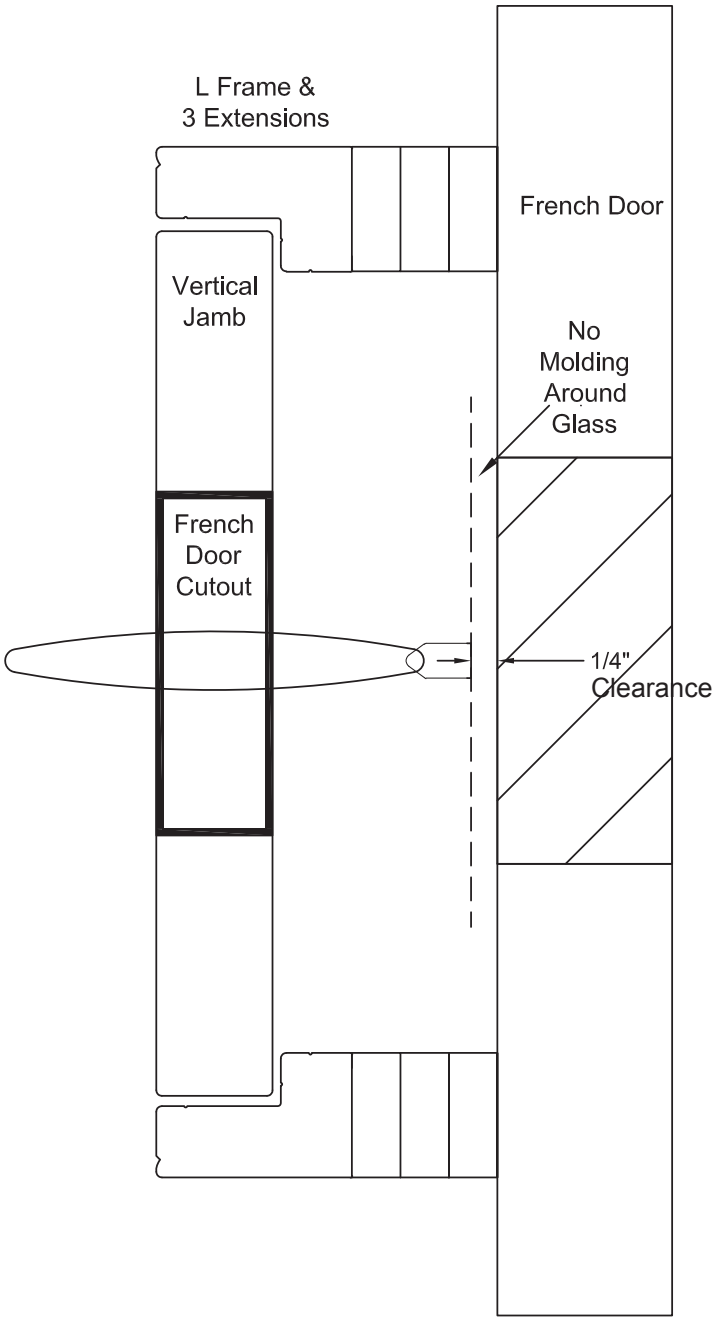

Outside Mount French Door With Cutout

Depth Clearance (With Molding Around Glass)
With Tilt Bar, Gear
4 1/2” Louver = (3) L Frame Extension Required

With Rear Tilt (Clearview)
4 1/2” Louver = (4) L Frame Extensions Required

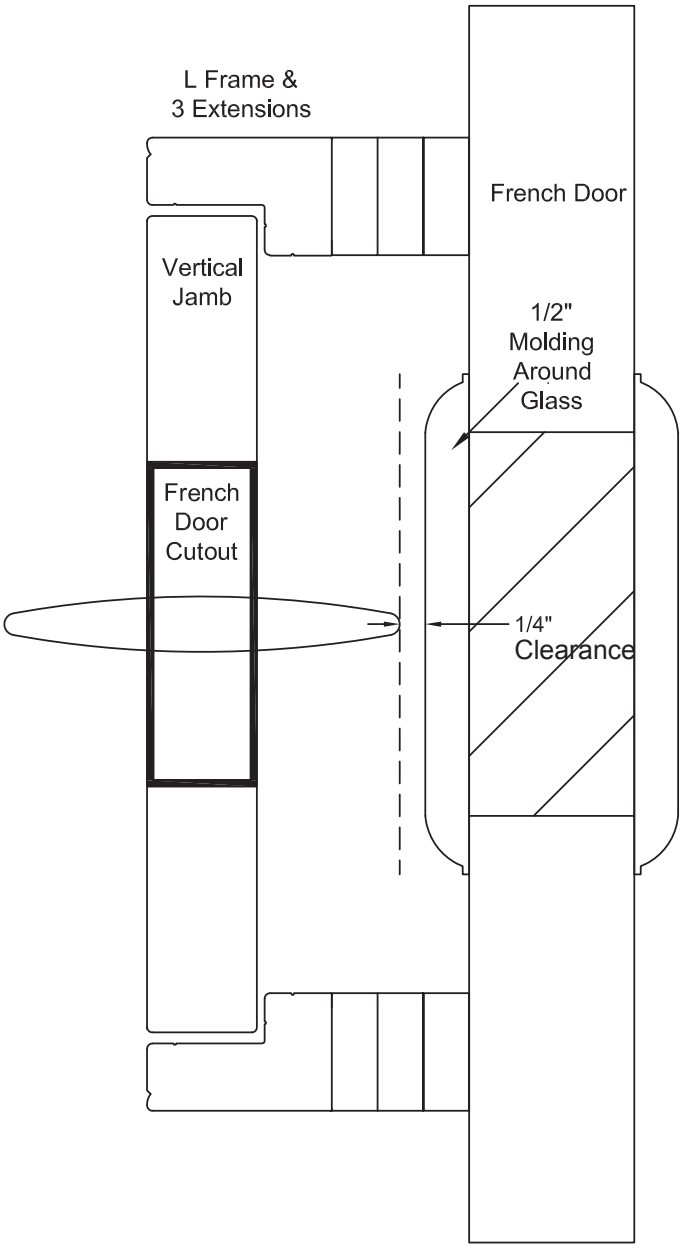

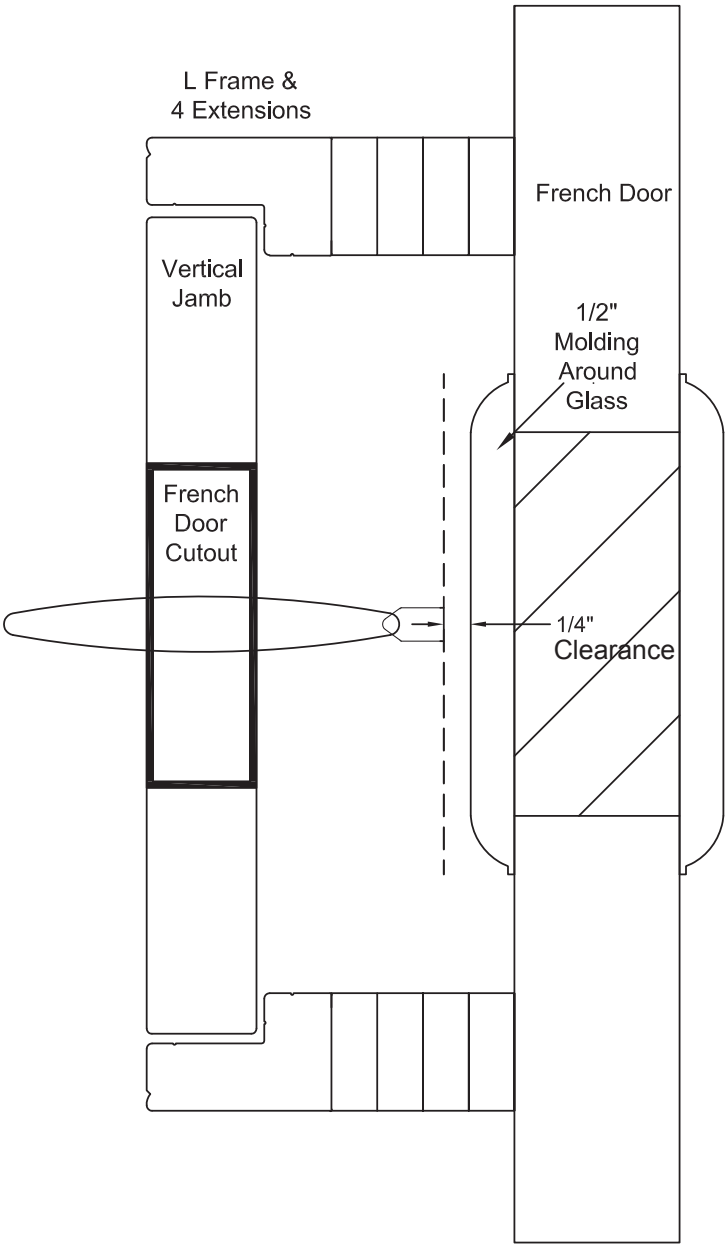

Outside Mount Two Sided L-Frame with Catch Receivers

Depth Clearance (No Molding Around Glass)
With Tilt Bar, Gear
2 1/2” Louver = (0) L Frame Extensions Required
3 1/2” Louver = (1) L Frame Extension Required
4 1/2” Louver = Not Available

With Rear Tilt
2 1/2” Louver = (1) L Frame Extension Required
3 1/2” Louver = (2) L Frame Extensions Required
4 1/2” Louver = Not Available

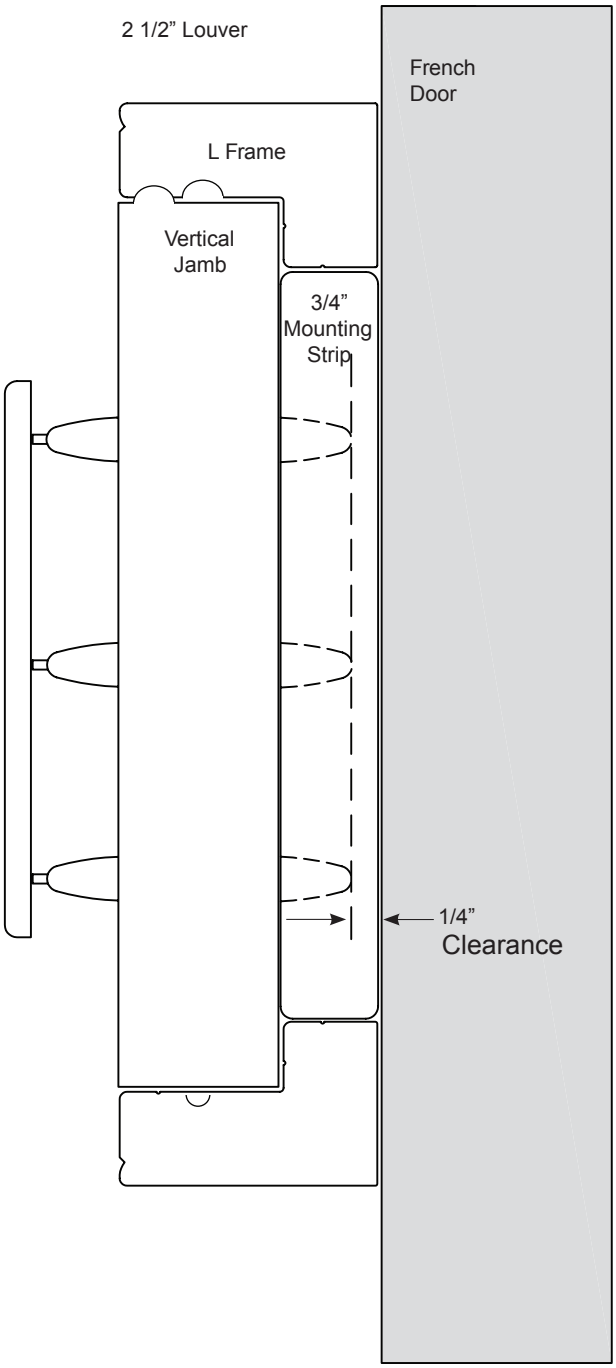

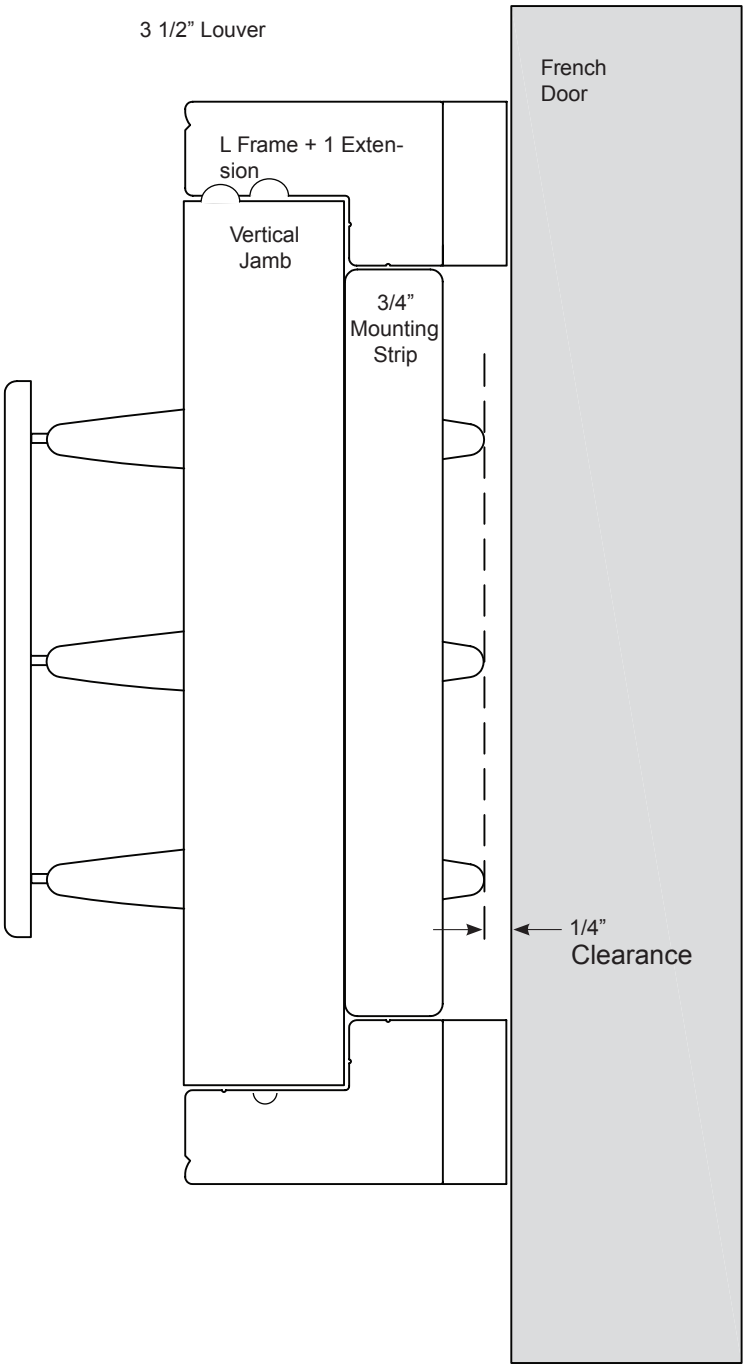

Note: 3/4” x 3/4” Mounting Strip is included on the back side of each jamb. Additional Mounting Strip may be requested on the order, which can be used to fill any remaining light gap.

Outside Mount Two Sided L-Frame with Catch Receivers

Depth Clearance (With Molding Around Glass)

With Tilt Bar, Gear
2 1/2” Louver = (1) L Frame Extension Required
3 1/2” Louver = (2) L Frame Extensions Required
4 1/2” Louver = Not Available

With Rear Tilt
2 1/2” Louver = (2) L Frame Extensions Required
3 1/2” Louver = (3) L Frame Extensions Required
4 1/2” Louver = Not Available

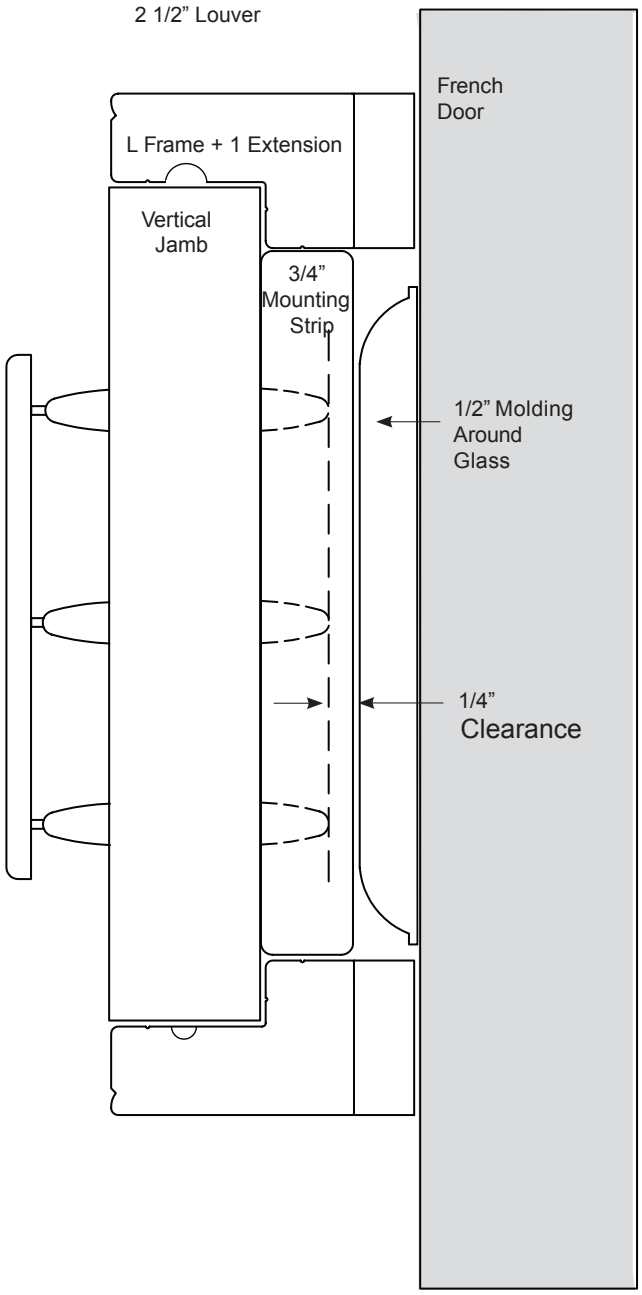

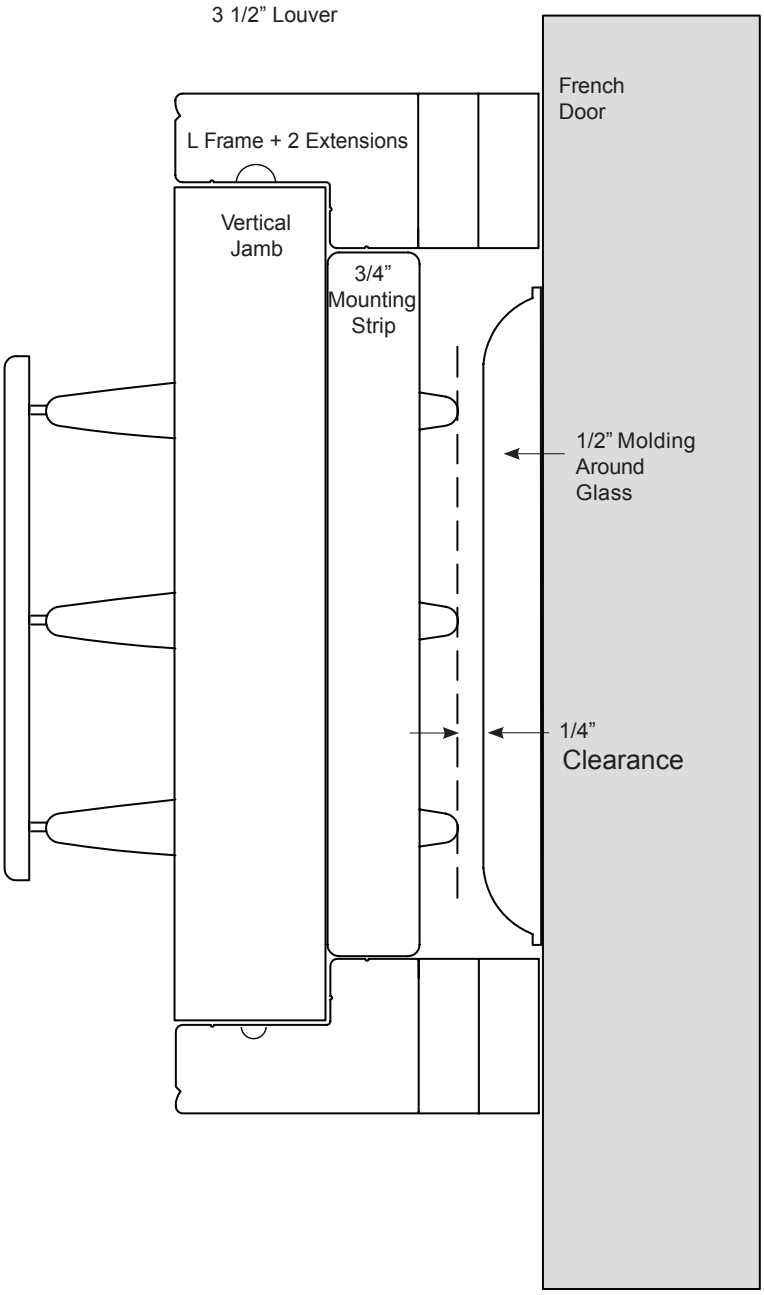

Note: 3/4” x 3/4” Mounting Strip is included on the back side of each jamb. Additional Mounting Strip may be requested on the order, which can be used to fill any remaining light gap.

Outside Mount - Four Sided Frame With FD Cutout On Top of Molding (Door with Handle)

Extra components provided are:

- 2 Side Frame Cover Strips (attach to the side frames to conceal the molding around the glass)
- 1 Set Top and Bottom L Frame Extensions (attach to the top and bottom frames where the shutter extends past the molding)

On the Standard Order Form enter Panel Configuration L or R and Shutter Application FD.

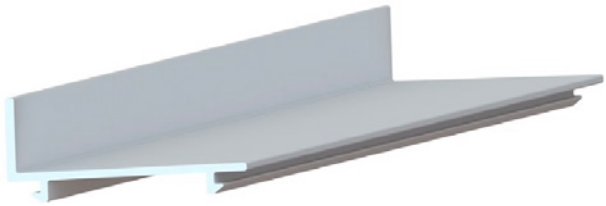

Side Cover Strip

Cover strip is used when the left and right frames are on top of molding.
If needed please note in special instructions.
PCN: D237-5136 - White / Cotton
D237-5140 - Almond / Vanilla
D237-5151 - Ivory / Pearl

Outside Mount - Four Sided Frame without Cutout (Companion Door with no Handle)

- Shutter is mounted around molding
- Make sure to match the # of extensions to the door with handle

On the Standard Order Form enter Panel Configuration L or R as a standard shutter.

Outside Mount - Two Sided Frame with Catch Receivers

Top and Bottom Frames are mounted above and below the molding or glass.
Extra components provided are:

- On the Standard Order Form enter Panel Configuration CR and Shutter Application FD.
- Extra components provided are: 2 Hinge Pins and 2 Panel Catches

On the Standard Order Form enter Panel Configuration CR (Catch & Receiver) and Shutter Application FD.

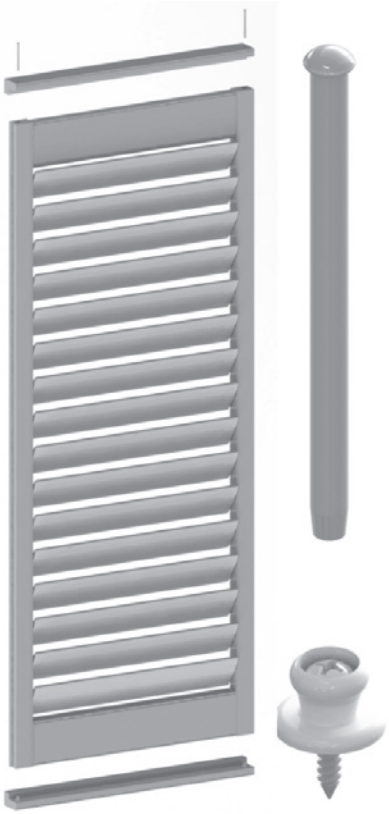

Note: Shutters with 3 or 4 extensions will require longer screws to be provided by installer.

Outside Mount - Four Sided Frame Above and Below Molding/On Top of Molding With or Without Cut-Out (use Standard Order Form)

1. LOUVER, FRAME AND APPLICATIONS

- Used for French Doors or sidelights where a 9/16" Bullnose molding or 1/2" flat molding is around the window.
- Use samples panels, L-frame and color samples from the shop at home bag.
- Four sided L-Frame is used for this French Door application.
- Depth clearance and obstructions can prevent louvers from operating properly. In order to overcome these obstacles, add up to 4 L-Frame Extensions. L-frame extensions are part of the frame if a cut-out if required and therefore must be used if ordered.
- On the Standard Order Form enter Panel Configuration L or R and Shutter Application FD.
- Extra components provided are: 2 Side Cover Strips and 2 L Frame Extensions

2. MEASURE OUTSIDE WIDTH (A)

- Measure width from outside of molding to outside of molding.
- If flat molding - ½ " is to be added to the width measurement for no cut-out, and 1-1/4" with cut-out.
- If rounded bullnose molding, or no molding - 1" to be added to the width measurement for no cut-out, and 1-3/4" with cut-out.
- The extra width allows the installation screws provided to be secured into the side moldings to minimize chance of the screw coming into contact with the window. For cut-out application with molding, the additional width allows the handle to fully cover the molding. For cut-out application with no molding, the extra width allows for the handle to cover the window and minimizes the chance of the installation screw touching the glass on the inside of the window.

3. MEASURE OUTSIDE HEIGHT (B)

- Measure height from the outside of molding to outside of molding
- If above and below molding - 2 ¾" is to be added to the height measurement.
- EXAMPLE – standard height of a French door is 66" therefore height should be 68 ¾" (B) Height when mounting directly onto molding (not recommended)
- If directly on flat molding - ½" to be added to the height measurement.
- If directly on Bullnose molding - 1 " to be added to the height measurement.
- The extra height if directly on moldings allows the installation screws provided to be secured to the top molding which minimizes the chance of the screws coming in contact with the window.

4. IF CUTOUT REQUIRED (C or D)

With lever handle and/or companion door

- Measure from the bottom of the frame location to the middle of the desired cutout location.
- The cutout can be centered on the door handle ("C") or centered between the door handle and the deadbolt ("D").
- An optional divider rail may be ordered. The divider rail will be positioned on center of the cutout.

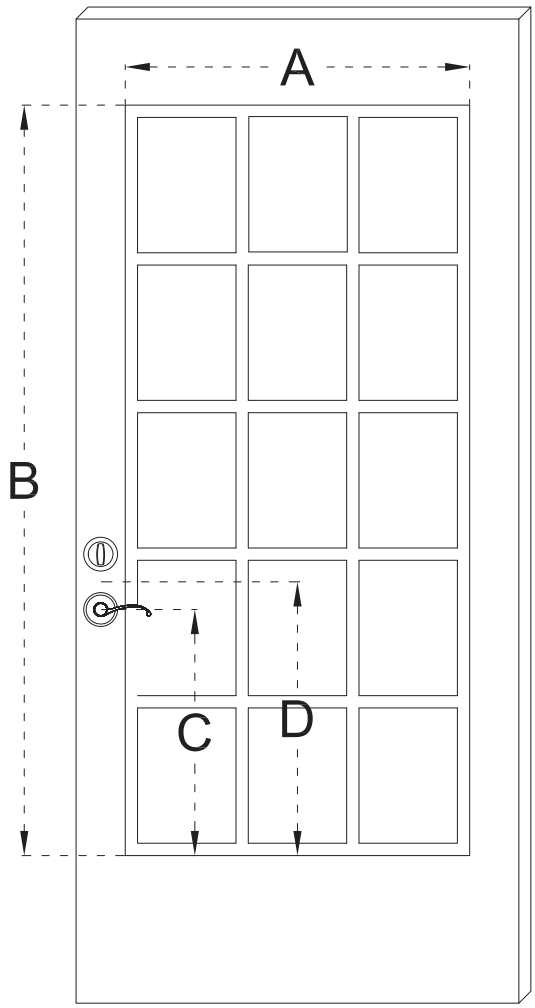

Outside Mount - Four Sided Frame Around Molding/Or No Molding Without Cut-Out (use Standard Order Form)

1. LOUVER, FRAME AND APPLICATIONS

- Used for French Doors or sidelights where frame goes around the molding or there is no molding.
- Use samples panels, L-frame and color samples from the shop at home bag.
- Four sided L-Frame is used for this application.
- Depth clearance and obstructions can prevent louvers from operating properly. In order to overcome these obstacles, add up to 4 L-Frame Extensions. L-frame extensions are part of the frame if a cut-out is required and therefore must be used if ordered.
- On the Standard Order Form enter Panel Configuration L or R and Shutter Application W.

2. MEASURE OUTSIDE WIDTH (A)

- Measure width from outside of molding to outside of molding or 1/2" past each side of the glass if there is no molding.
- Add 2 3/4" to the width measurement.
- The extra width allows the installation screws provided to be secured into the side moldings to minimize chance of the screw coming into contact with the window

3. MEASURE OUTSIDE HEIGHT (B)

- Measure height from the outside of molding to outside of molding or 1/2" past each side of the glass if there is no molding.
- Add 2 3/4" to the height measurement.
- The extra height allows the installation screws provided to be secured into the side moldings to minimize chance of the screw coming into contact with the window
- The additional height allows for the L frame to be installed above and below the moldings. .

4. IF CUTOUT REQUIRED (C or D)

With lever handle and/or companion door

- Measure from the bottom of the frame location to the middle of the desired cutout location.
- The cutout can be centered on the door handle ("C") or centered between the door handle and the deadbolt ("D").
- An optional divider rail may be ordered. The divider rail will be positioned on center of the cutout, therefore the distance up for the divider rail is the same as the distance up for the cut-out.

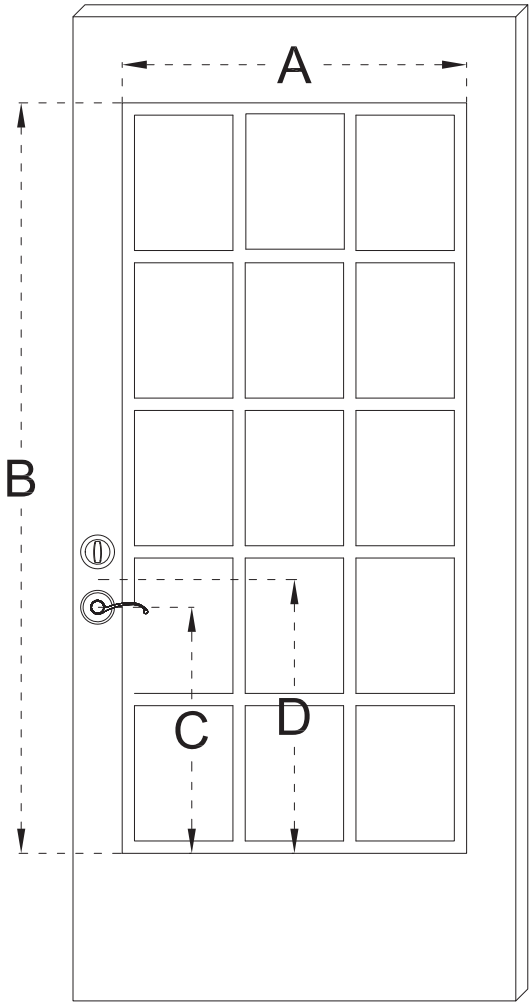

French Door Shutters with Cutouts

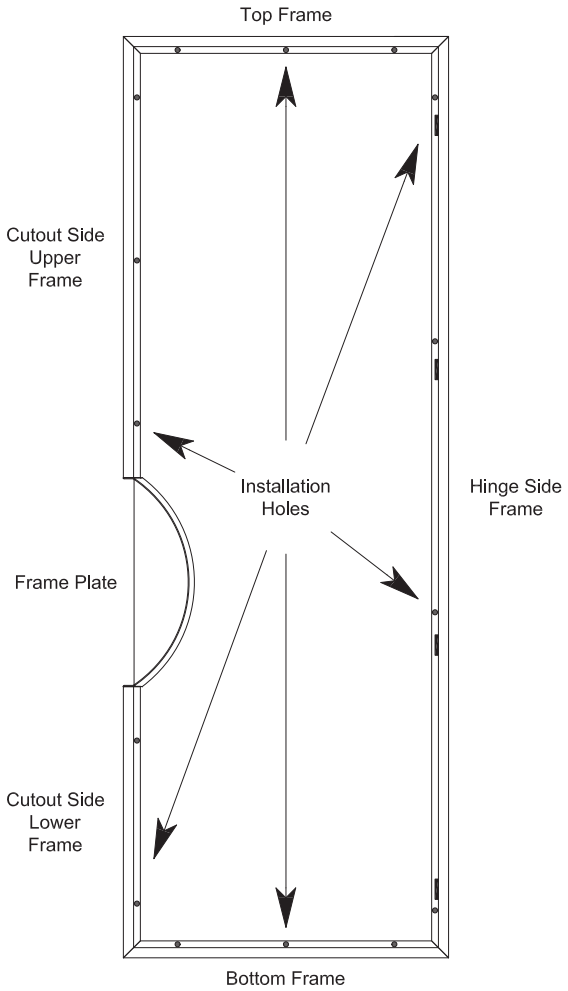

1. FRAME ASSEMBLY

- In order to prevent shipping damage, the panel and frame should ship as a fully assembled unit.
- The frame will be completely assembled and ready to install, including the frame plate located on the cutout side of the shutter.

2. FRAME INSTALLATION

- Partially set an installation screw into the upper cutout side frame and upper hinge side frames.
- Set the frame against the door to check position of the frame and the alignment of the cutout to the handle or between the handle and the deadbolt.
- Level the top frame and set the cutout side screw. Ensure the centerline of the frame plate will align with the handle and the outside edge of the frame plate will cover the glass but not interfere with the handle.
- Set the top hinge side screw, making sure the top frame is level.
- Set the panel in the frame and verify location and operation. Move the bottom frame left or right to achieve best possible operation of the panel.
- Install screws on the lower frame side below the cutout and check operation of panel.
- Continue setting screws and checking operation of panel.
- Install button plugs once all screws have been set.

3. SIDE BY SIDE FRENCH DOORS

- The installation method remains the same for both shutters in a side by side installation.
- Begin by installing the shutter on the door with an operational handle. If both handles operate choose either door.
- Install the first shutter as described above.
- Once the first shutter is complete, place a long level on the top frame of the installed shutter. Allow the level to hang across the face of the second door.
- Begin installing the second frame and make sure the top frame aligns with the level, and thus the first shutter.
- Finish installing second shutter as described above.

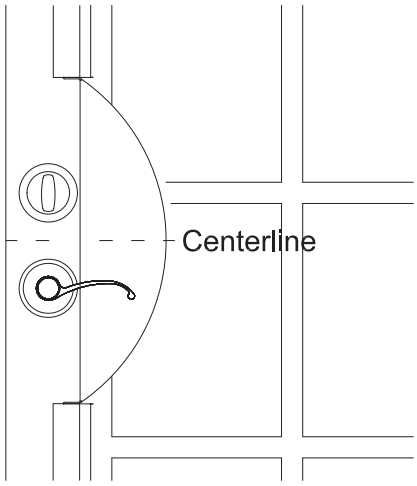

Outside Mount - Four Sided Frame Above and Below Molding/On Top of Molding With or Without Cut-Out

1) Layout frames and extensions as ordered
2) Slide the Side Cover Strip into side frames
3) Slide the additional top and bottom L frame extensions
4) If mounting directly onto the molding. Do not use the extra L Frame extensions provided for the top and bottom frame sections.
5) Insert Frame corner keys – glue if L frame is not notched
6) Place frame over molding
7) Secure top frame above the molding with the provided installation screws - 1 ½" installation screws will be provided if one or less extensions are requested - 2" installation screws will be provided if two or more extensions are requested
8) Hang Panel
9) Secure bottom frame above the molding with the provided installation screws - 1 ½" installation screws will be provided if one or less extensions are requested - 2" installation screws will be provided if two or more extensions are requested
10) Secure the side frames on to the molding with the provided installation screws:
    5/8" for no extension; 1" for 1 extension;
    1 ¼" for 2 extensions; 2" for 3 extensions
11) The cover strip may not be completely tight to the door or wall. Caulking may be used to cover any gaps.

Without Side Cover Strip

With Side Cover Strip

Outside Mount - Two Sided L-Frame with Catch Receivers (Not recommended) Mounted Above and Below Molding or on Top of Molding Without Cut-Out

2 SIDED FRAME (TOP & BOTTOM)

1. FRAME ASSEMBLY

- Attach the two panel catches to the bottom frame as indicated by the pre-drilled indents..

2. FRAME & CATCH RECEIVER INSTALLATION

- Partially set an installation screw into the bottom frame.
- Set the bottom frame on the door as measured for and mark the position with a pencil.
- Make sure the bottom frame is level and positioned left and right so the panel will not interfere with the door knob.
- Attach the bottom frame.
- Carefully set the panel on the bottom frame and locate the position of the top frame. Then mark this location and remove panel
- Attach the top frame making sure it is level and aligned properly with the bottom frame.
- Install button plugs once all screws have been set.
- Place the panel into position with the bottom of the panel jambs covering the panel catch.
- Insert hinge pins through the top of the top frame into top of the panel jamb

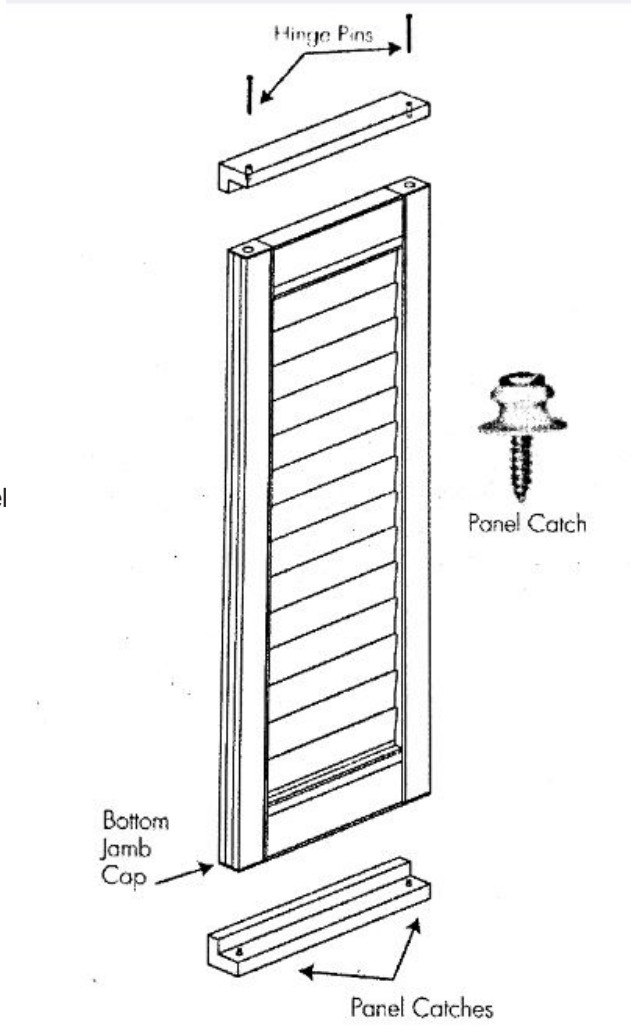

Completing the Standard Order Form

1. Line Number
2. Room – enter the room location for each French Door
3. Operating System – Choose either Gear, Rear Tilt or Tilt Bar
4. Split Option – if desired, select the distance up measured from the bottom of the frame location
5. Color – select from one of three colors
6. Hinge Color – select the desired hinge color to coordinate with the shutter or room decor
7. Ext. Hinge - must be N
8. Louver Size – select louver size (2 ½”, 3 ½”, or 4 ½”)
9. Mount Type - OM is required for French Doors
10. Frame Type - L-Frame Only
11. Width – measure the width in inches to the 1/8”
12. Height – measure the height in inches to the 1/8”
13. Panel Configuration - Left (L), Right (R) or Catch Receiver (CR)
14. P1 Interlock - Only available with four sided frame and no cut-out
15. Shutter Application -
    - FD if Outside Mount - Four Sided Frame Above and Below Molding/On Top of Molding With or Without Cut-Out
    - W if Outside Mount - Four Sided Frame Around Molding/Or No Molding Without Cut-Out
    - FD if Outside Mount - Two Sided L-Frame with Catch Receivers (Not recommended) Mounted Above and Below Molding or on Top of Molding Without Cut-Out
16. Frames
    - Number of Frame Sides – 2 or 4 (reminder: 4 sided only option for cutout)
    - Sill frame not applicable
    - L extension: 1, 2, 3 or 4 (reminder: cut-out is attached to the frame therefore, if ordered must be used)
17. Divider Rail
    - #1: distance up if requested
    - #2: not applicable
    - Type: Standard (S) or Deluxe (D)

H

STANDARD AND OPEN BY-PASS TRACK SYSTEM

By-Pass Track System Diagram - Standard By-Pass with Standard Valance

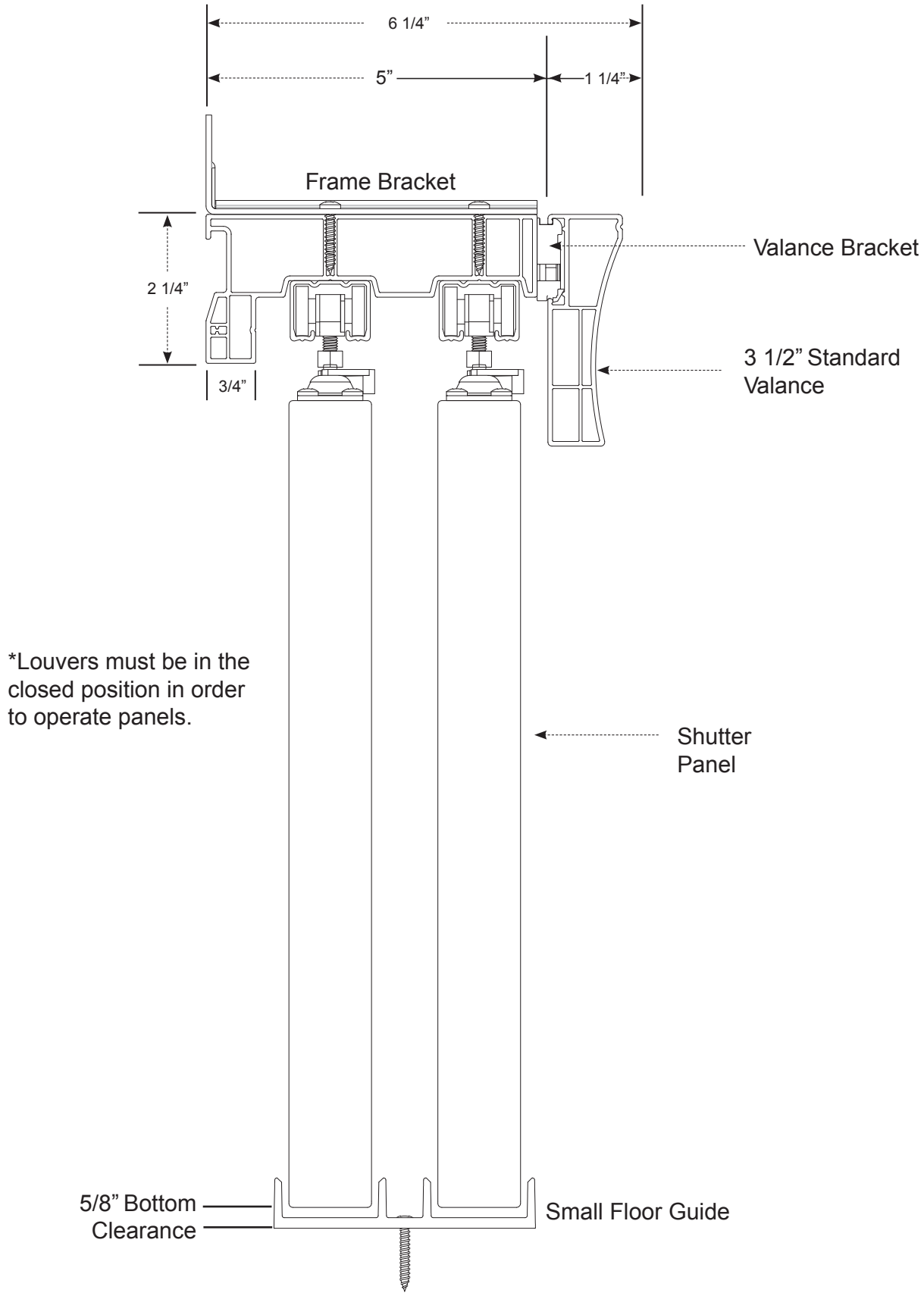

By-Pass Track System Diagram - Standard By-Pass with Crown Valance

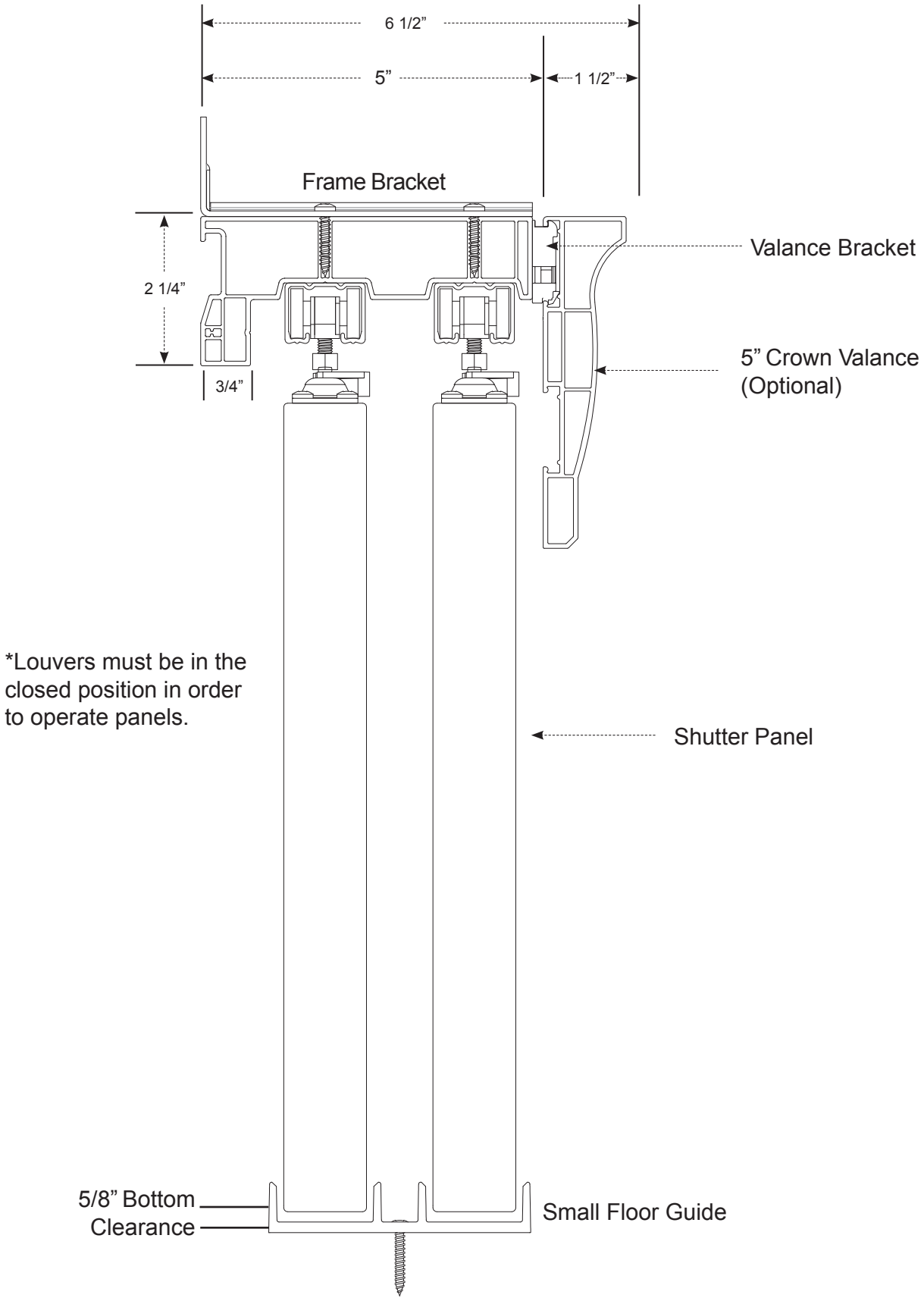

By-Pass Track System Diagram - Open By-Pass with Standard Va-

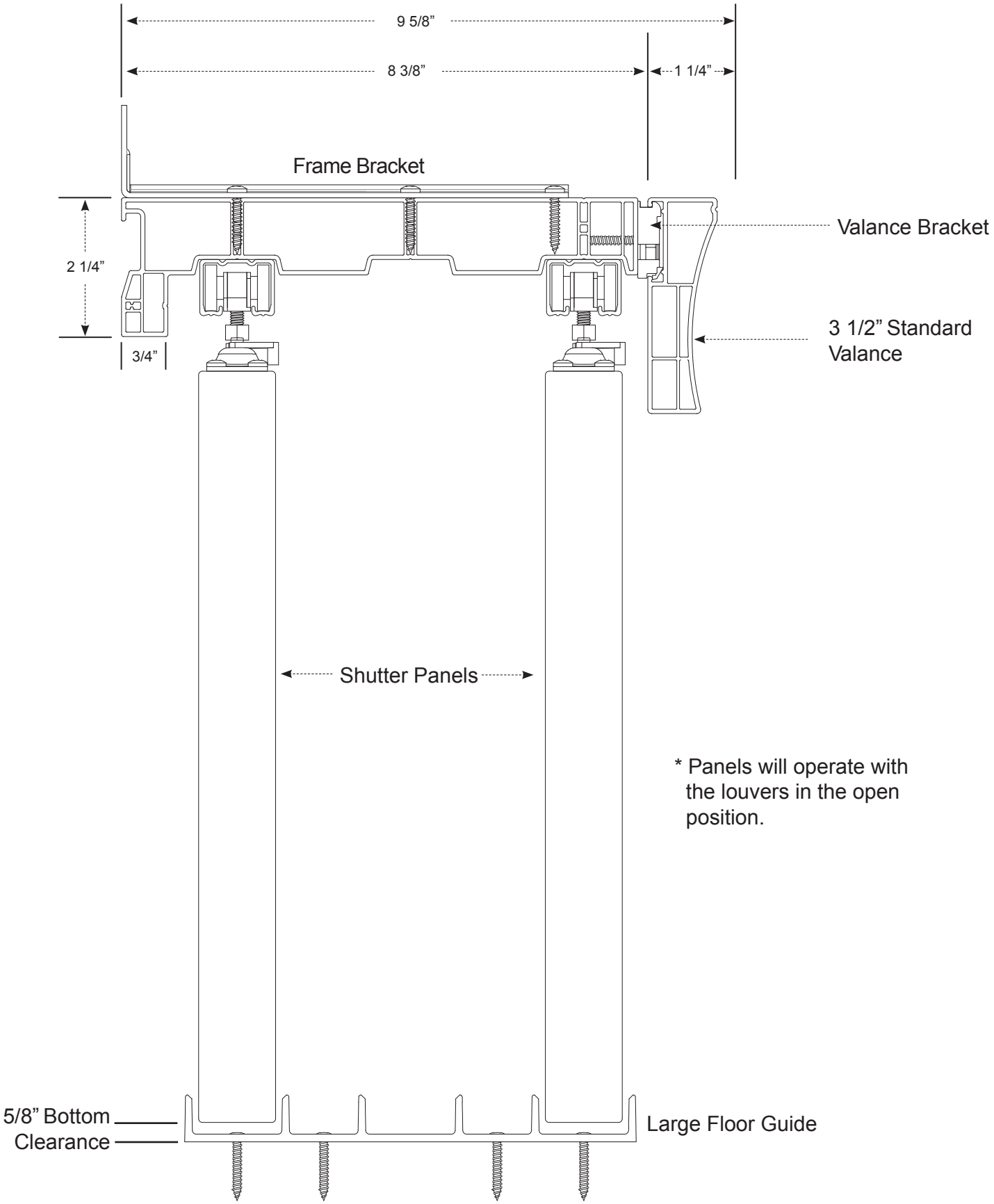

By-Pass Track System Diagram - Open By-Pass with Crown Valance

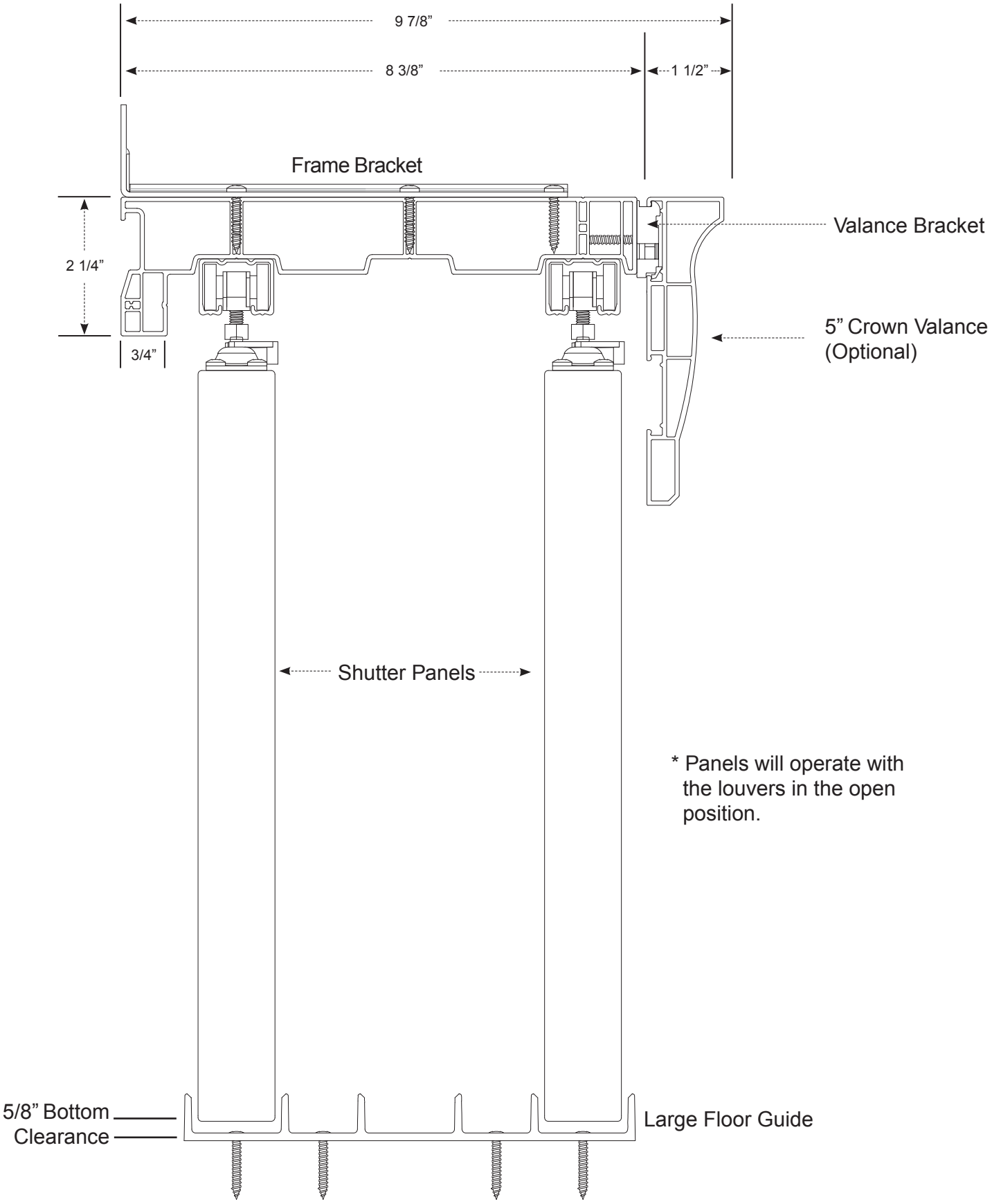

Two Panel By-Pass

P2BP-L

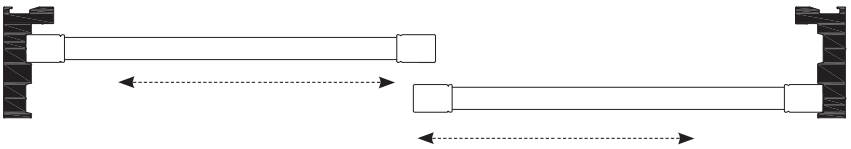

P2BP-R

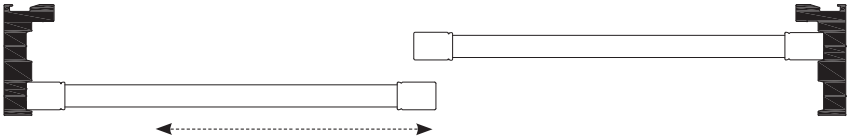

P2OB-L

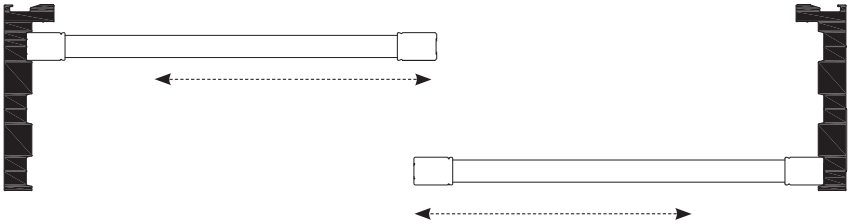

P2OB-R

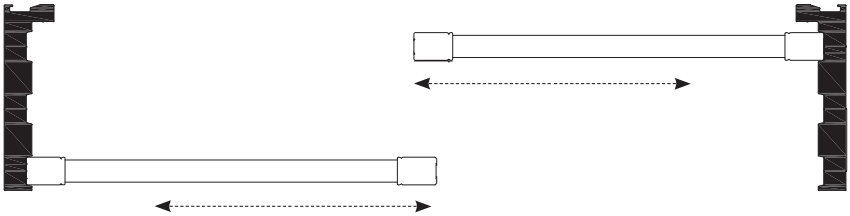

- Minimum Width: 24”
- Maximum Width: 72”
- Minimum Height: 20”
- Maximum Height: 120”

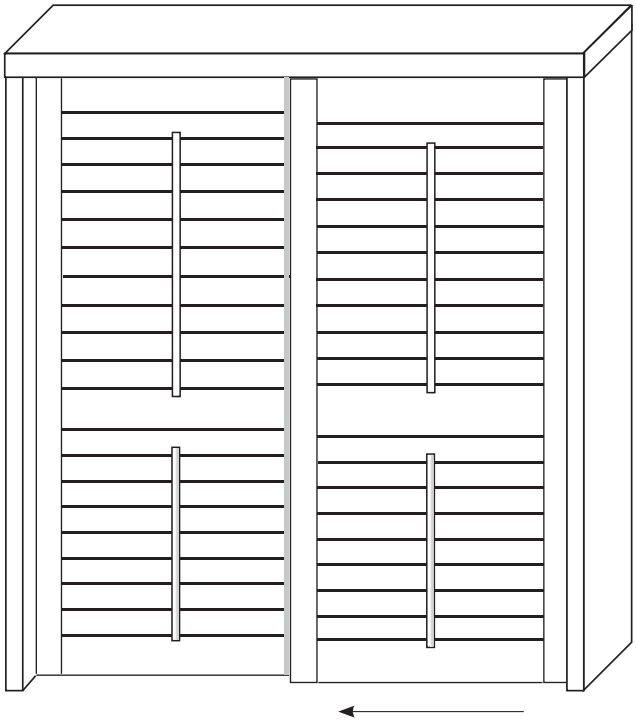

Note: Both panels will operate allowing access to the window or door.

Three Panel By-Pass

P3BP-LCR

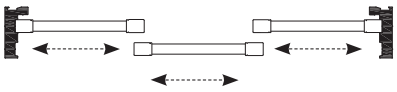

P3OB-LCR

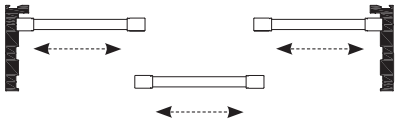

Center panel opens over left or right panel.

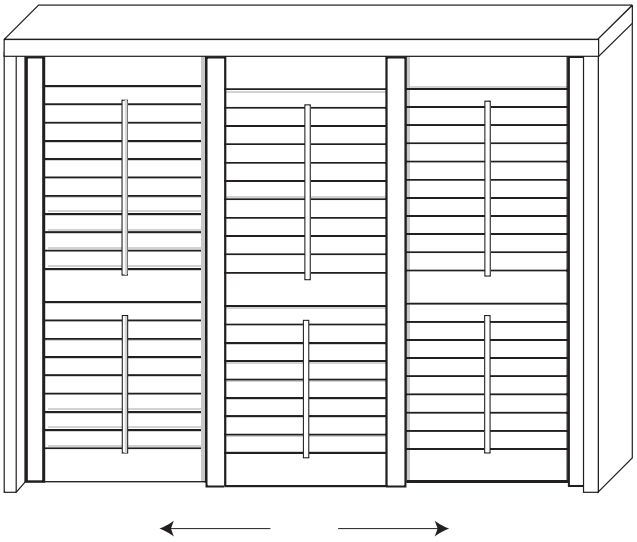

- Minimum Width: 36”
- Maximum Width: 108”
- Minimum Height: 20”
- Maximum Height: 120”

Four Panel By-Pass

P4BP-LCCR

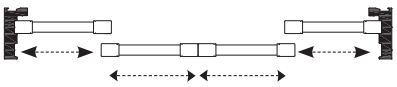

P4OB-LCCR

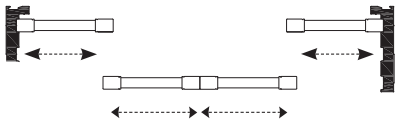

Left center panel opens over left panel, Right center panel opens over right panel.

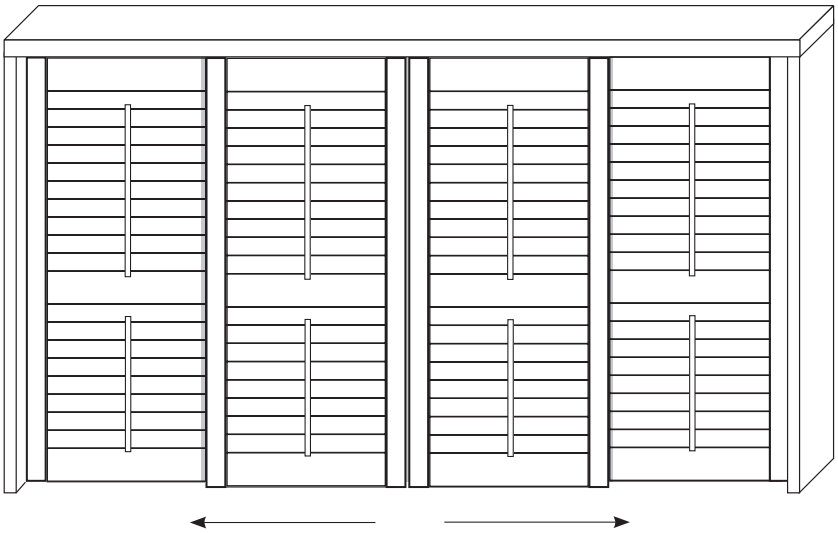

- Minimum Width: 48”
- Maximum Width: 144”
- Minimum Height: 20”
- Maximum Height: 120”

Four Panel By-Pass

P4BP-2L2R

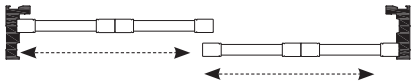

P4OB-2L2R

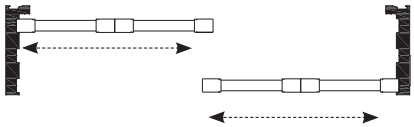

Two right panels open over two left panels.

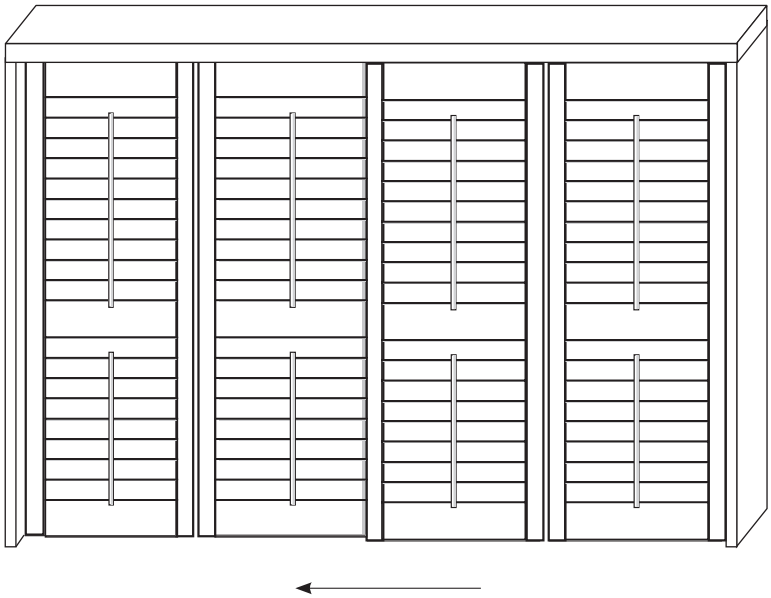

- Minimum Width: 48”
- Maximum Width: 144”
- Minimum Height: 20”
- Maximum Height: 120”

P4BP-2R2L

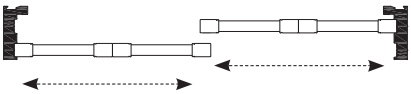

P4OB-2R2L

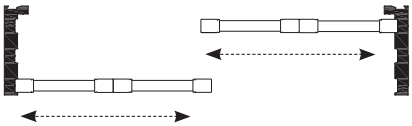

Two left panels open over two right panels.

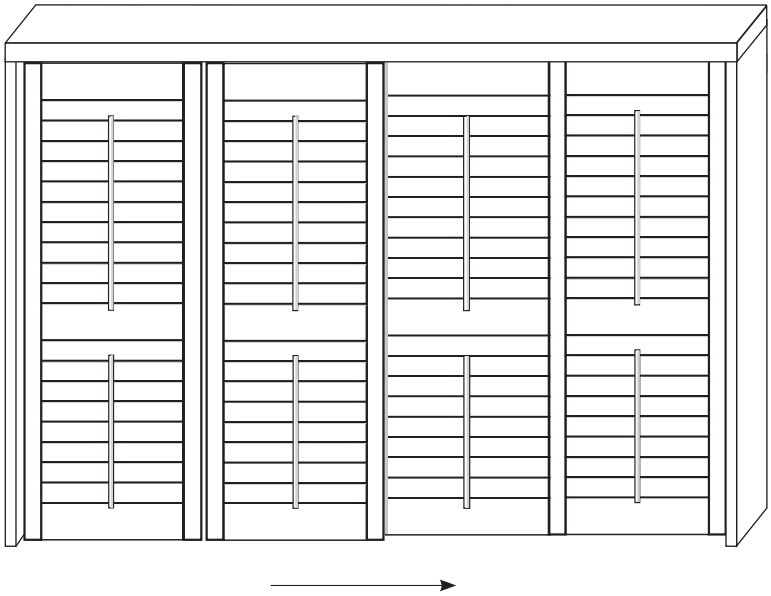

- Minimum Width: 48”
- Maximum Width: 144”
- Minimum Height: 20”
- Maximum Height: 120”

Six Panel By-Pass

P6BP-2L2C2R

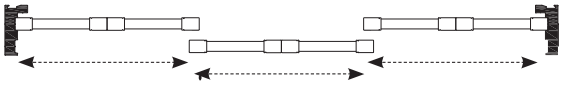

P6OB-2L2C2R

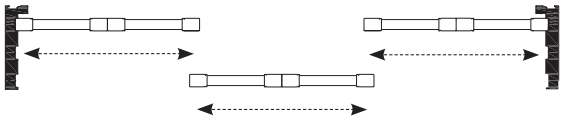

Two center panels, open over either two left or two right panels.

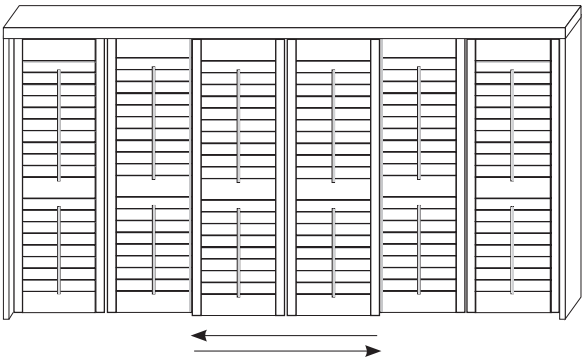

- Minimum Width: 72”
- Maximum Width: 180”
- Minimum Height: 20”
- Maximum Height: 120”

P6BP-2LC-C2R

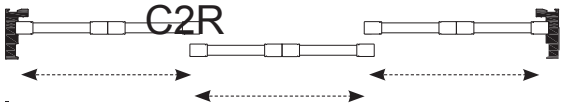

P6OB-2LC-C2R

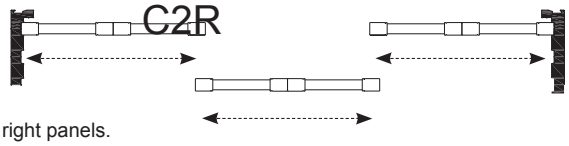

Two center panels, not joined, open over either two left or two right panels.

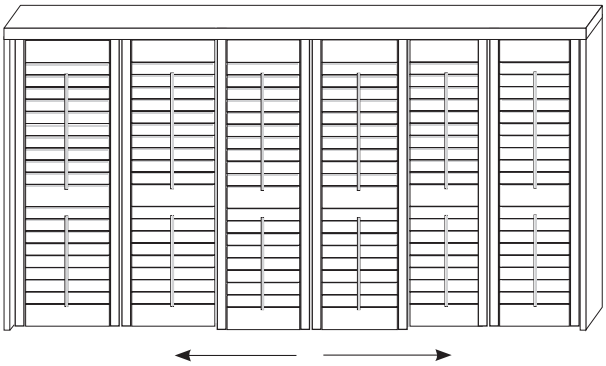

- Minimum Width: 72”
- Maximum Width: 180”
- Minimum Height: 20”
- Maximum Height: 120”

Eight Panel By-Pass

P8BP-2L2C2C2R

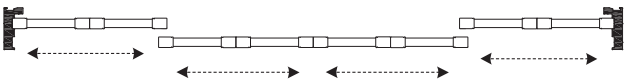

P8OB-2L2C2C2R

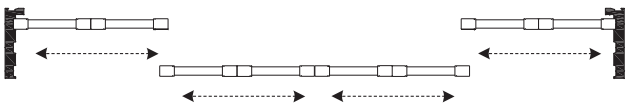

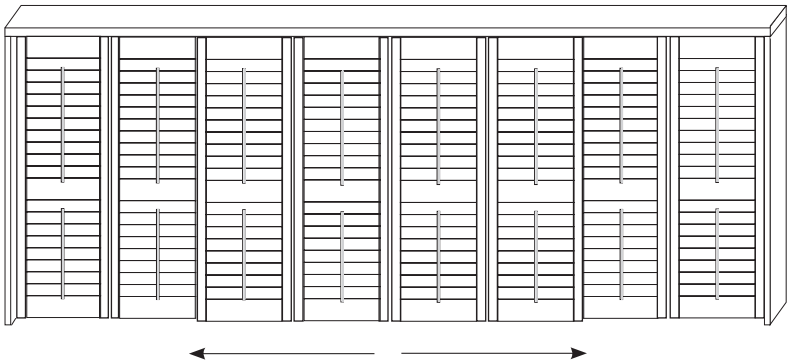

Two left center panels open over two left panels,
two right center panels open over two right panels.

- Minimum Width: 96”
- Maximum Width: 192”
- Minimum Height: 20”
- Maximum Height: 120”

By-Pass Clearance Chart

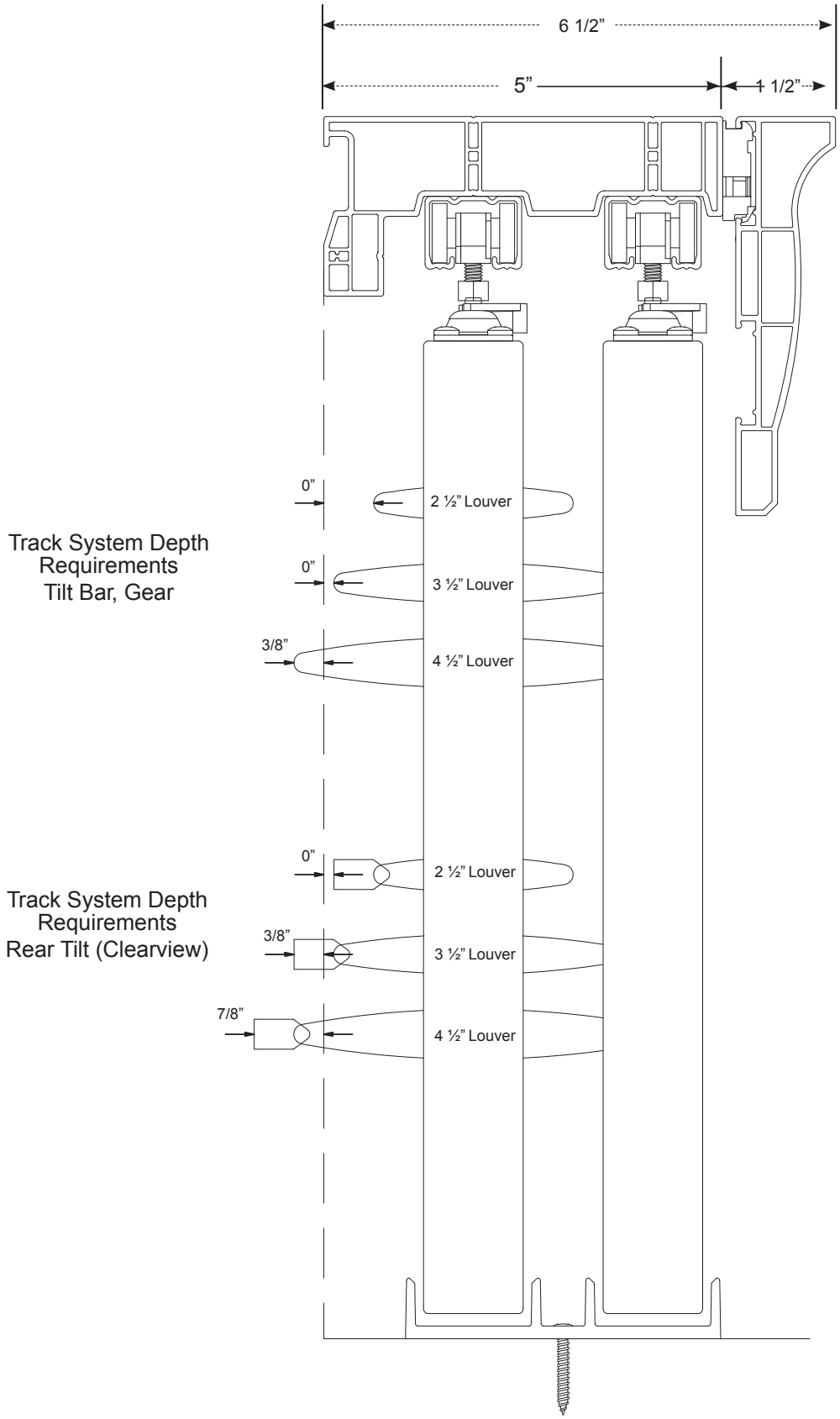

Open By-Pass Clearance Chart

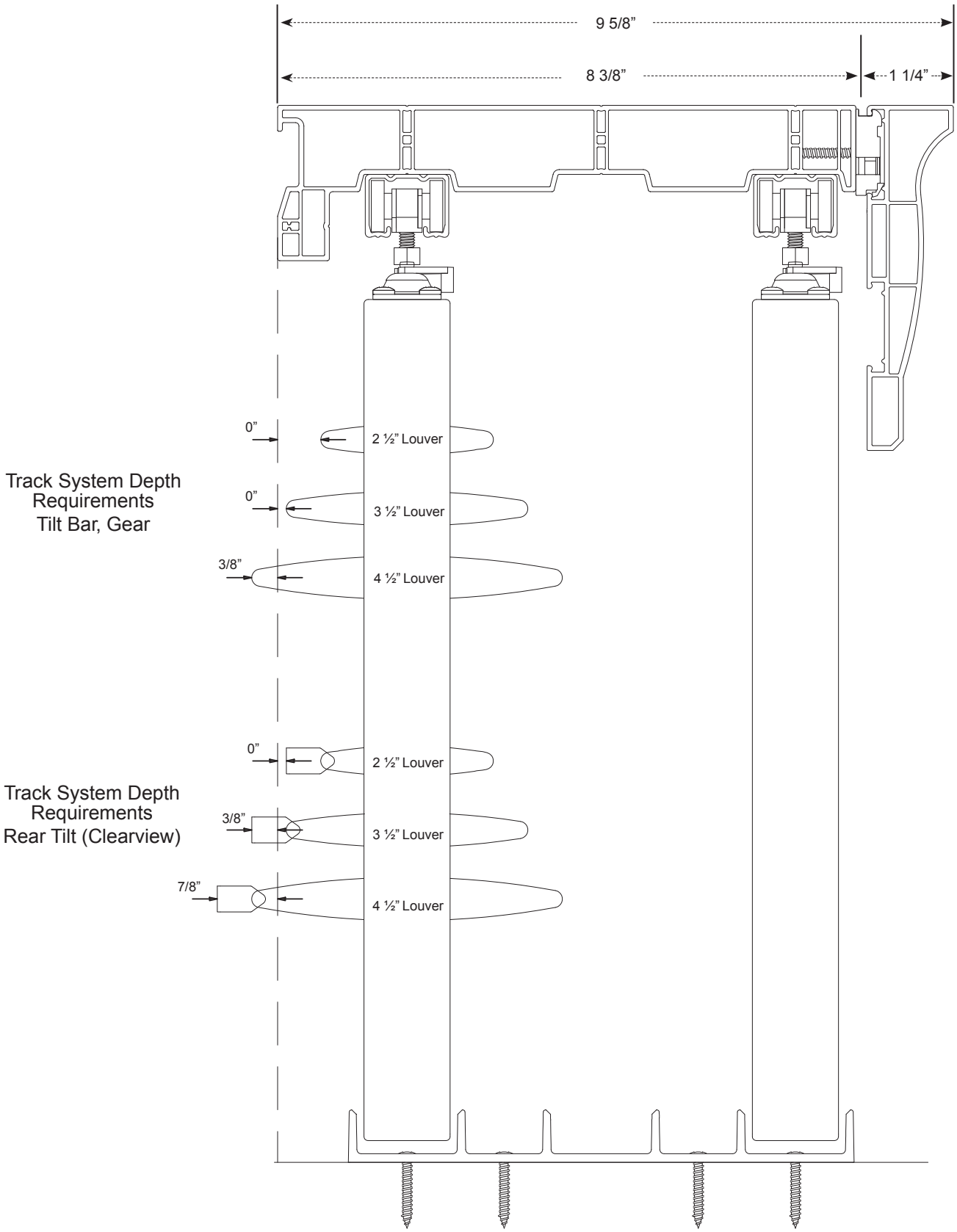

By-Pass Measuring Instructions

- Inside mounts must have a jamb depth of 2”.
- Inside mounts may be ordered without side frames (jamb depth must be 4” minimum).
- Outside mount standard by-pass will project 6 1/2” (including Crown valance) from the wall and open louver by-pass will project 9 7/8” (including crown valance) from the wall.

Note: Shutter louvers cannot open when panels are in front of one another, unless open louver by-pass is ordered.

Diagram A

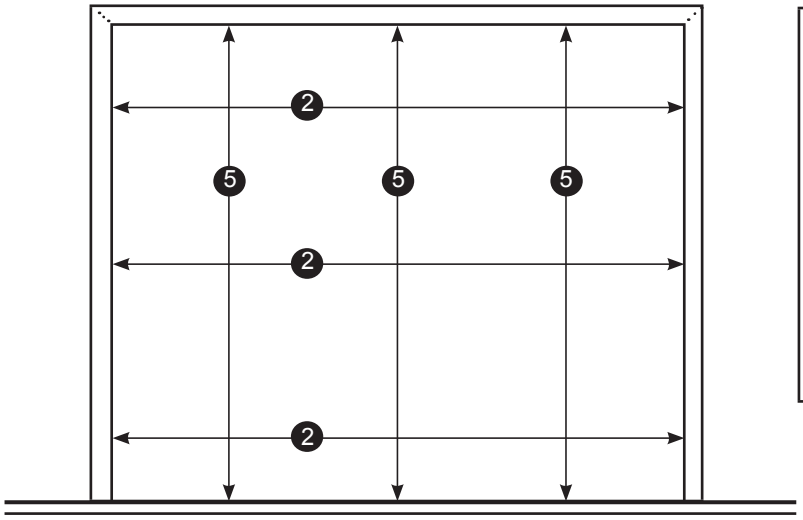

Diagram B

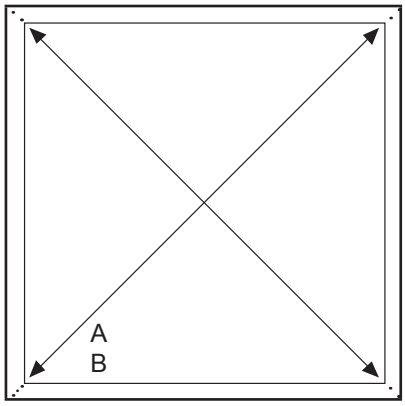

❸ Diagonal squareness check

❶ CHOICE OF FRAME SIDES AND LOUVER
Use the sample shutter panels to determine proper louver rotation. Check that your chosen louver will overcome any obstruction by placing the frame and panel in front of the obstructions. It is recommended that an inside mount have a minimum jamb depth of 2”. A one sided frame (top) can be ordered for this application. Indicate BP (Standard By-Pass) or OB (Open By-Pass) in the frame options section of the Order Form. If additional projection is required, request BP extension. Each extension is 3/4”.

❷ CHECK FOR SQUARENESS
Measure on the diagonal (see Diagram B). If the diagonal measurements are not identical, an inside mount is not recommended. An alternative way to check for a perfectly square window, simply place your panel in each of the four corners. If you find the panels are not flush in all corners, the window opening is not square.

❸ MEASURE INSIDE WIDTH
Measure in three places (top, middle, bottom) and record the smallest measurement onto a Order Form if the application is for an inside mount. For an outside mount, a minimum of 2 1/4” is required to be added to each side that a frame is required.

❹ MEASURE INSIDE HEIGHT
Measure in three places (left, middle, right) and record the smallest measurement onto a Order Form if the application is for an inside mount. For an outside mount a minimum of 2 1/4” is required to be added to the top and/or bottom that a frame is required.

❺ ONLY IF A DIVIDER RAIL IS BEING USED
The measurement recorded is determined from the bottom sill to the middle of where the divider rail is to be located. One divider rail is required for panels over 66” with a maximum 66” between the middle of the divider rail and either top or bottom rail. Two divider rails are required for panels over 96” in height with a maximum 66” between any two rails.

❻ CHOICE OF PANEL CONFIGURATION
Determine from pages H5 to H8. Complete the remainder of the Order Form. Sill Frames and Double Hungs are not applicable with the By-pass Systems.

❼ ORDER VALANCE
Choose between the 3 1/2” Standard Valance or 5” Crown Valance and select the appropriate valance returns on the track system order form. See page H17-18.

1. **FRAME ASSEMBLY**
   Set the provided 3" screws into the assembly holes in the top frame. Aline the screws with the screw ports inside the side frames (fasten tightly).
2. **FRAME SPACERS**
   Spacers are glued or placed at the ends of any top frame in which side frames are present. The spacers are located in the panel/track recesses of the top frame. The assembly screws will pass through the spacer and into the side frames.
3. **INSTALLATION HOLES**
   Once the frames are assembled, installation holes are required by using a 3/8" drill bit (if not pre-drilled).
   A) For an inside mount, drill a 3/8" hole through the first layer of Polyresin 3, within the mounting area every 10" starting at each end of the frame.
   B) For an outside mount, drill a 3/8" hole through the first layer of Polyresin 3 at the front edge of the reveal of the frame every 10".
4. **FRAME INSTALLATION**
   A) For an inside mount, fasten the top frame to the opening, making sure it is level; shim to level if necessary.
   B) For an outside mount, set the frame against the wall. Level the top and fasten the top frame to the wall with the provided installation screws
5. **WHEEL CARRIERS**
   Insert wheel carriers inside each aluminum track. Two carriers are assigned to each panel so check the panel configuration to determine the correct number of carriers in each track.
6. **ALUMINUM TRACKS**
   Mount aluminum tracks to the extreme left of the opening of the frame by screwing through the predrilled holes in the track to the extrusion indicator lines on the underside of the top frame.
7. **ATTACH OPTIONAL LIGHTBLOCK BETWEEN PANELS**
   A) For Standard By-pass, one piece of ¾" x ¾" mounting strip is mounted at the back of the interior edge of each front panel.
   B) For Open By-pass, two pieces of vertical jamb are used as lightblock between panels. One piece of vertical jamb is mounted at the back of the interior edge of the front panel, while the second piece is mounted at the front interior edge of the rear panel. For either option, drill a 3/8" hole starting at the top, every 20" through the first two layers of Polyresin 3.

   Screw the mounting strip or the vertical jamb to the panel and cap holes with button plugs.

   Note: Mounting strips/vertical jambs are 1" shorter than the panels so there is no interference with the floor guides.

   Note: For Open By-pass shutters, a gap of 7/8" will remain once vertical jambs have been installed.
3. **HANG SHUTTERS**
   Push the door plates onto the adjustable nut of the wheel carriers. Lock the panels in place by rotating the plastic slide around the neck of the wheel carrier adjustable nut. To level the panels, turn the adjustable nut of the wheel carrier with the provided wrench tool.
9. **SECURE SIDE FRAMES IF APPLICABLE**
   Mount each side frame with the mounting screws provided so that the frames are plumb to the hanging panel. Cover the 3/8" holes with the button plugs.
10. **ATTACH DOUBLE PANELS IF APPLICABLE**
    When two panels are to be attached, they are connected using hinges. Push the panels together and make sure the hinges align (adjust panels heights as needed). Open louvers and reach through to set hinge pins to connect panels or open the door and insert the hinge pins from the back side of the panels.
11. **ATTACH VALANCE IF APPLICABLE**
    Attach valance brackets to the front of the frame using the included #8 x 1" screws, the installation holes should be pre-drilled. Once all brackets are secure, position the channel on the back of the valance so that it rests on the bracket. The valance will need to be on a 45° angle, with the bottom of the valance farther into the room. Rotate the valance down to a vertical orientation until locked into all brackets.

    If the valance and return tilt, then use a hinge shim on the valance clip to level.
12. **OPTIONAL FLOOR GUIDE(S)**
    Install floor guide(s) in-between each set of moving panels. The guides prevent the doors from swinging forward into the room or back into the opening. Two sizes are available depending on type of by-pass.

Diagram C - Frame Assembly

1. Insert the provided 3” screws though the top frame
2. Line up the screw through the screw ports inside the side frames (fasten tightly)

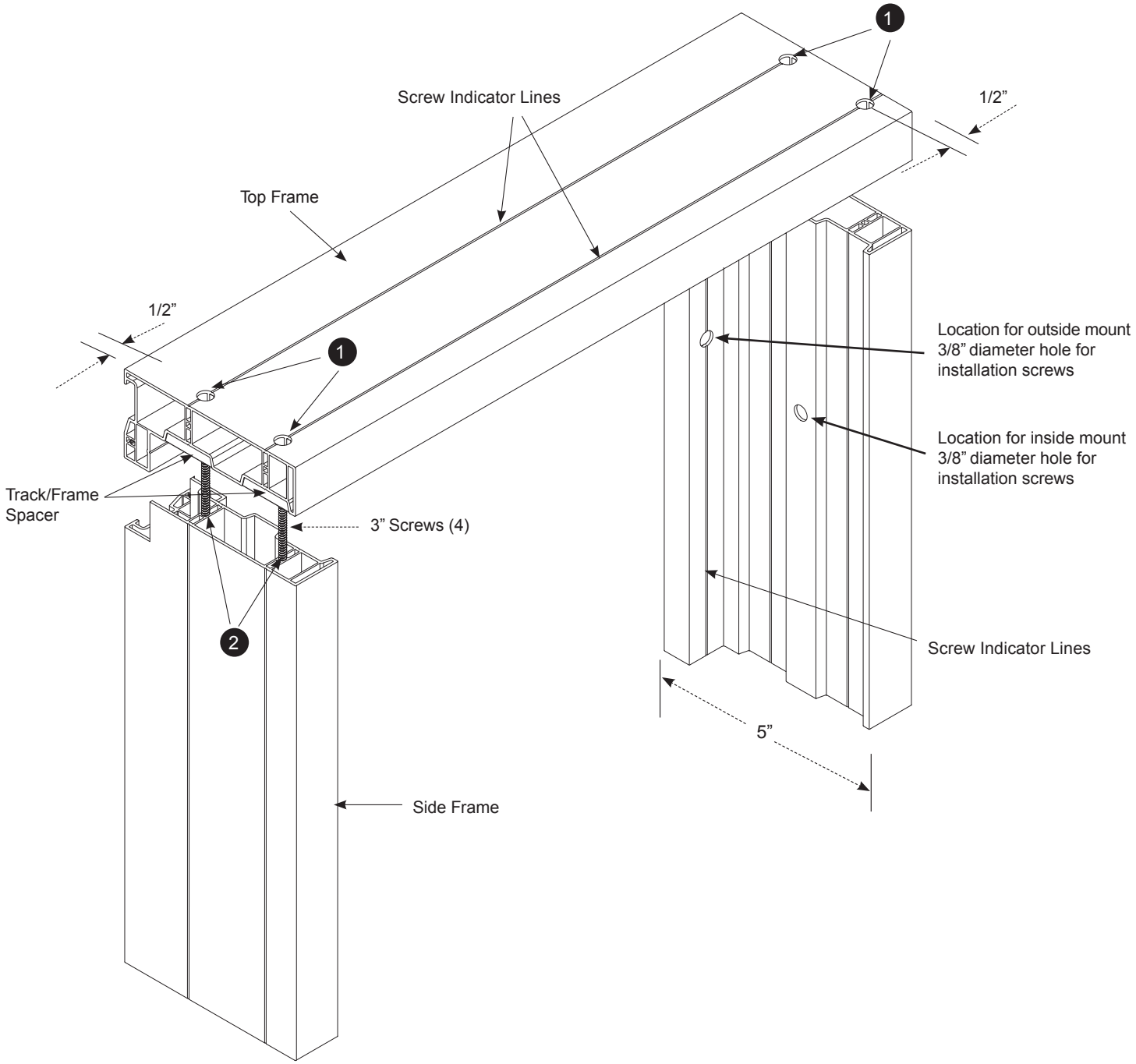

By-Pass Track System Diagrams

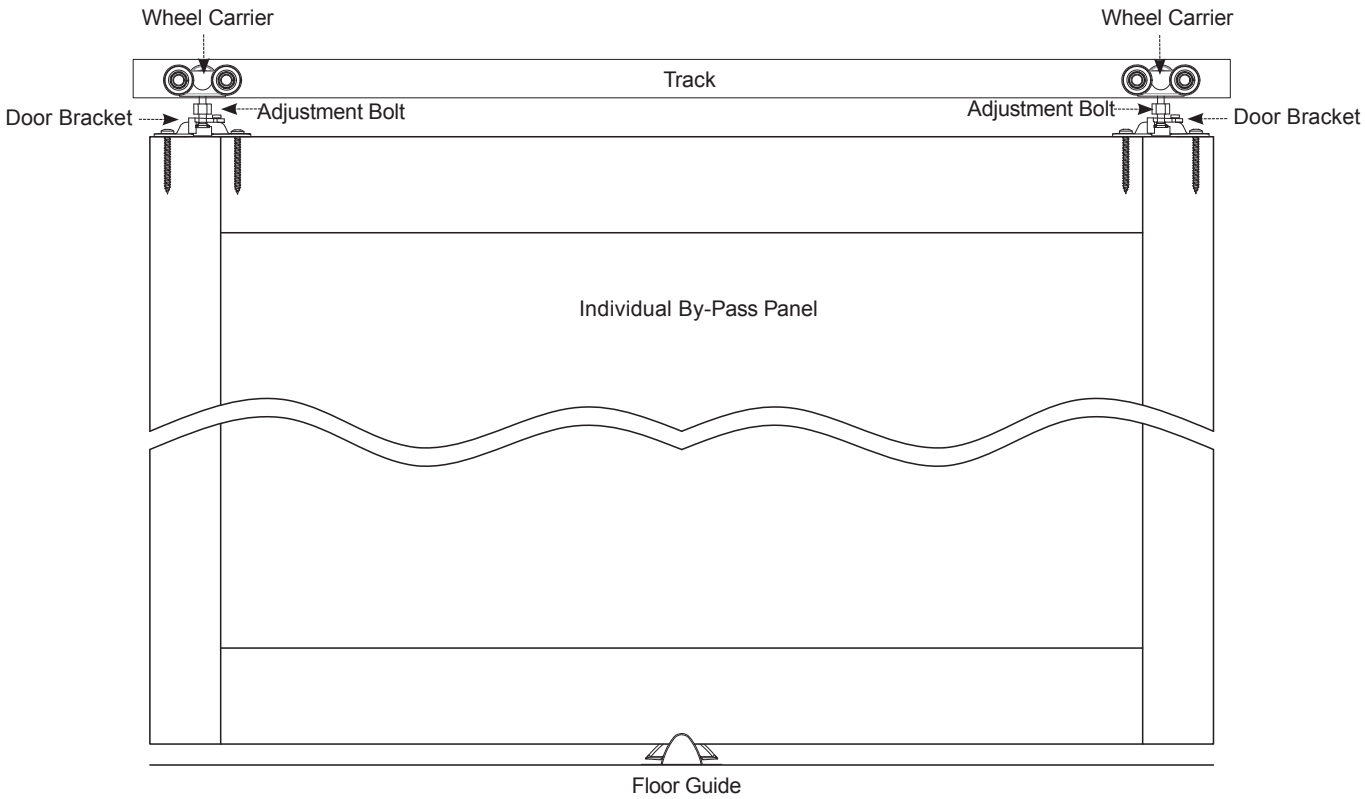

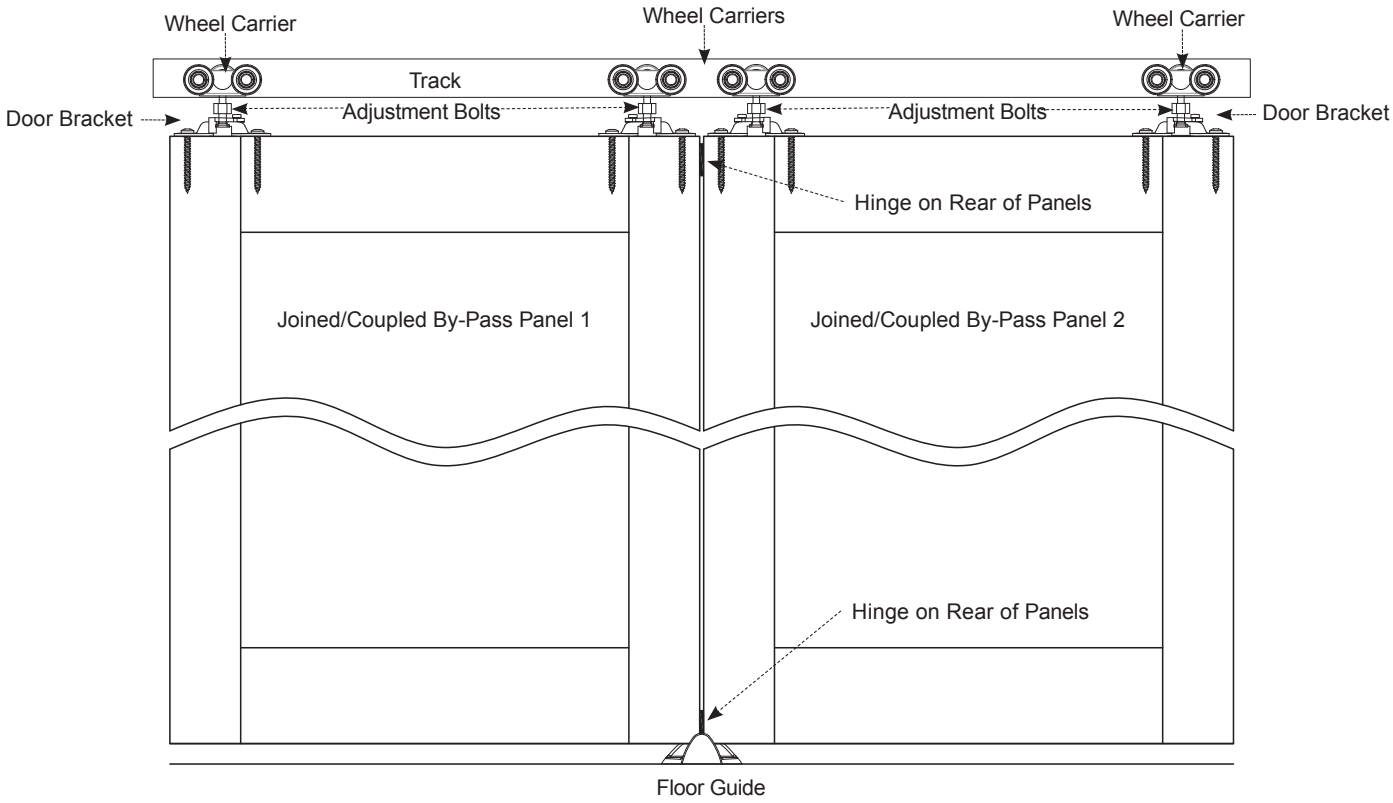

Diagram D - Inside Mount Application

Note: With track secured to the frame, remove every other 1” track screw. Replace each with a #8 x 2” screw.

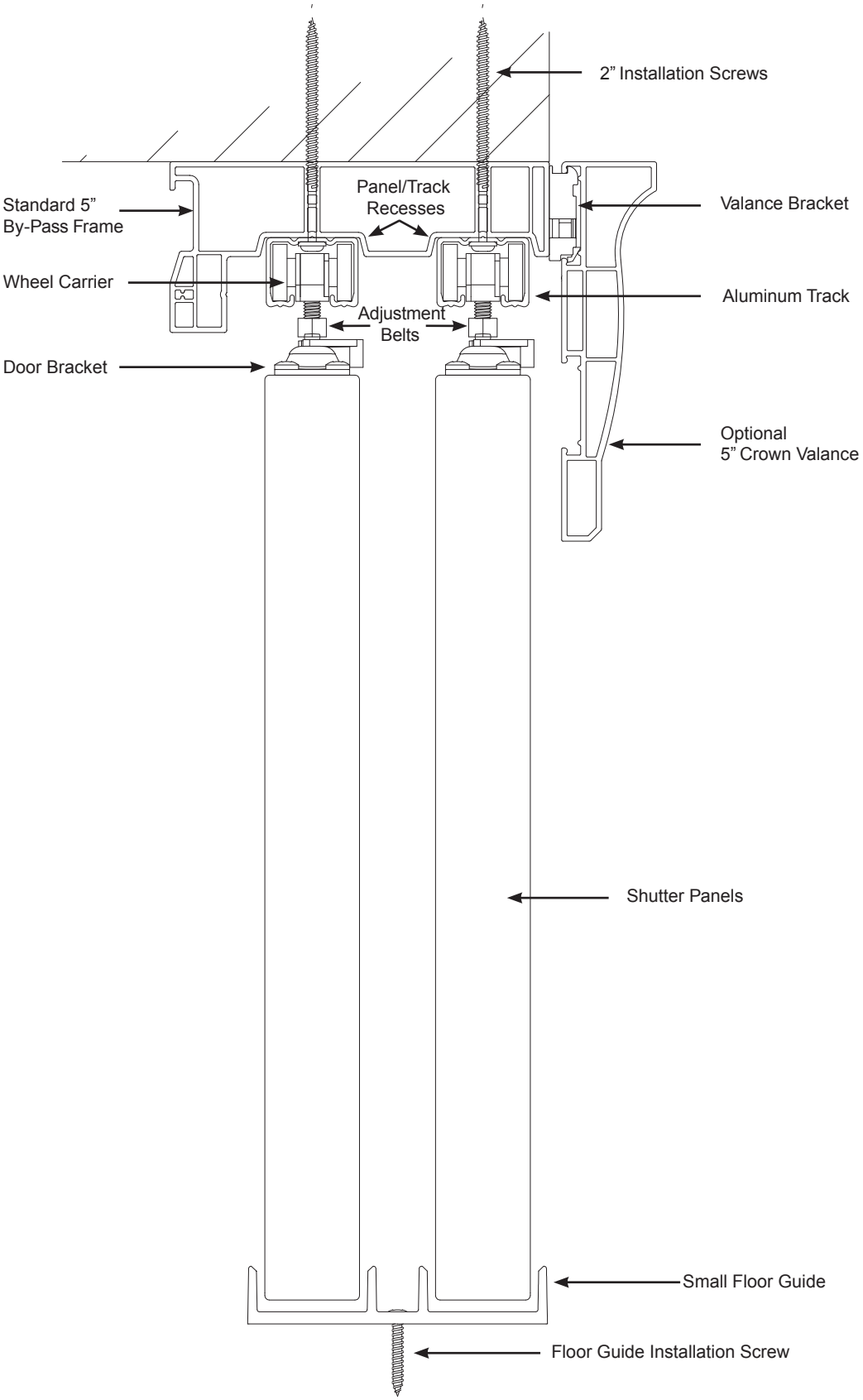

Diagram E - Inside Mount Application

Note: With track secured to the frame, remove every other 1” track screw. Replace each with a #8 x 2” screw.

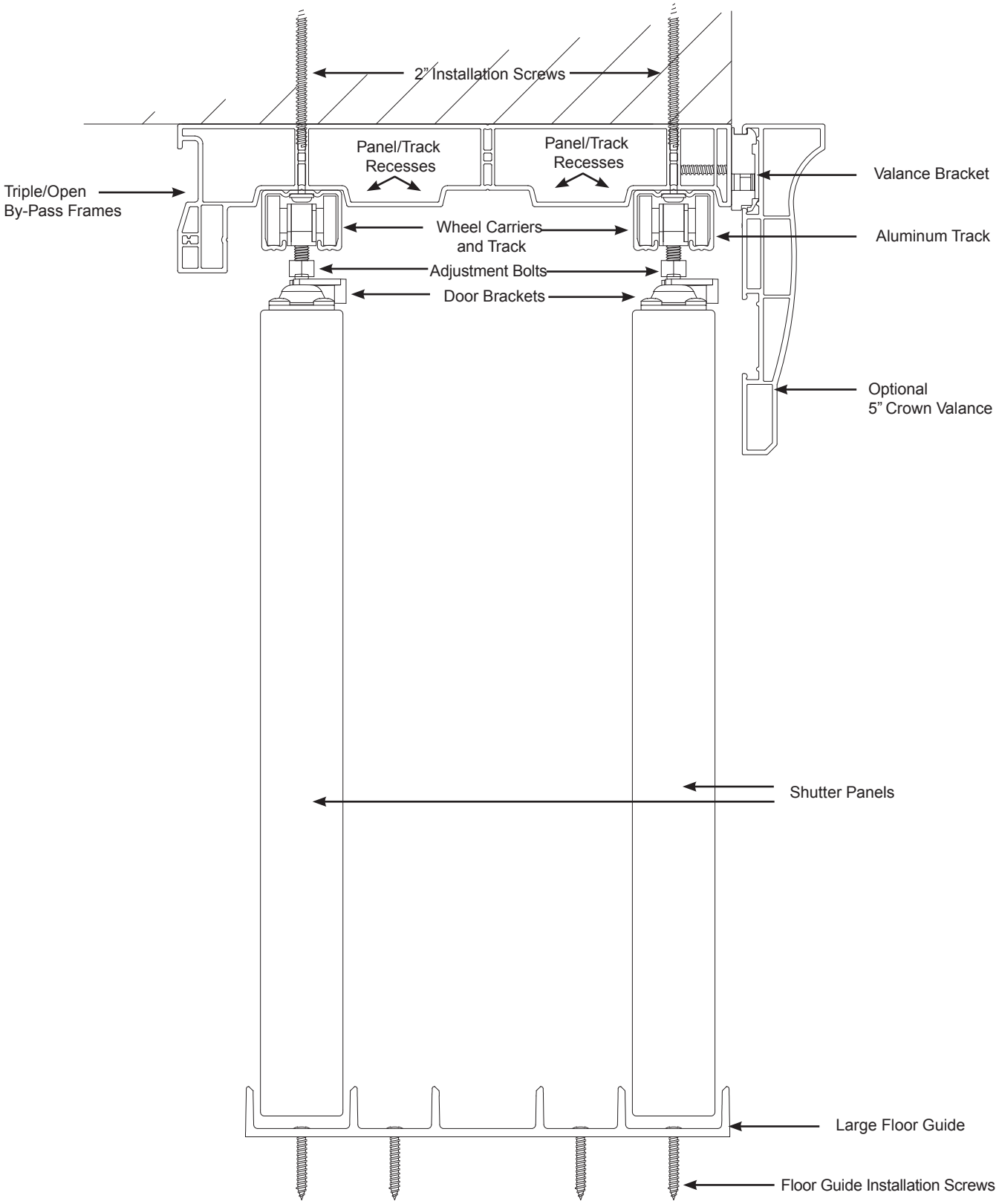

Diagram F - Outside Mount Application

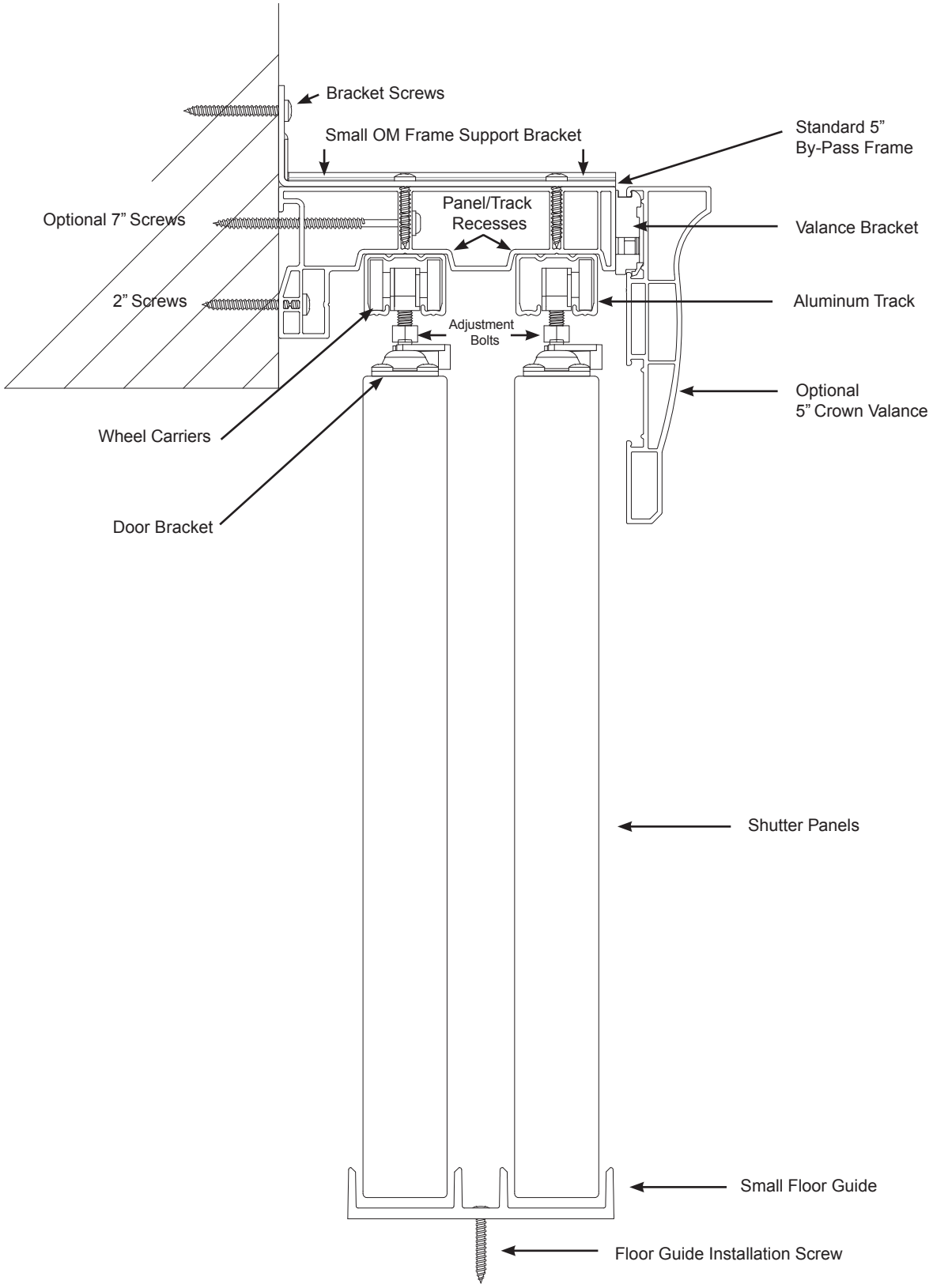

Diagram G - Outside Mount Application

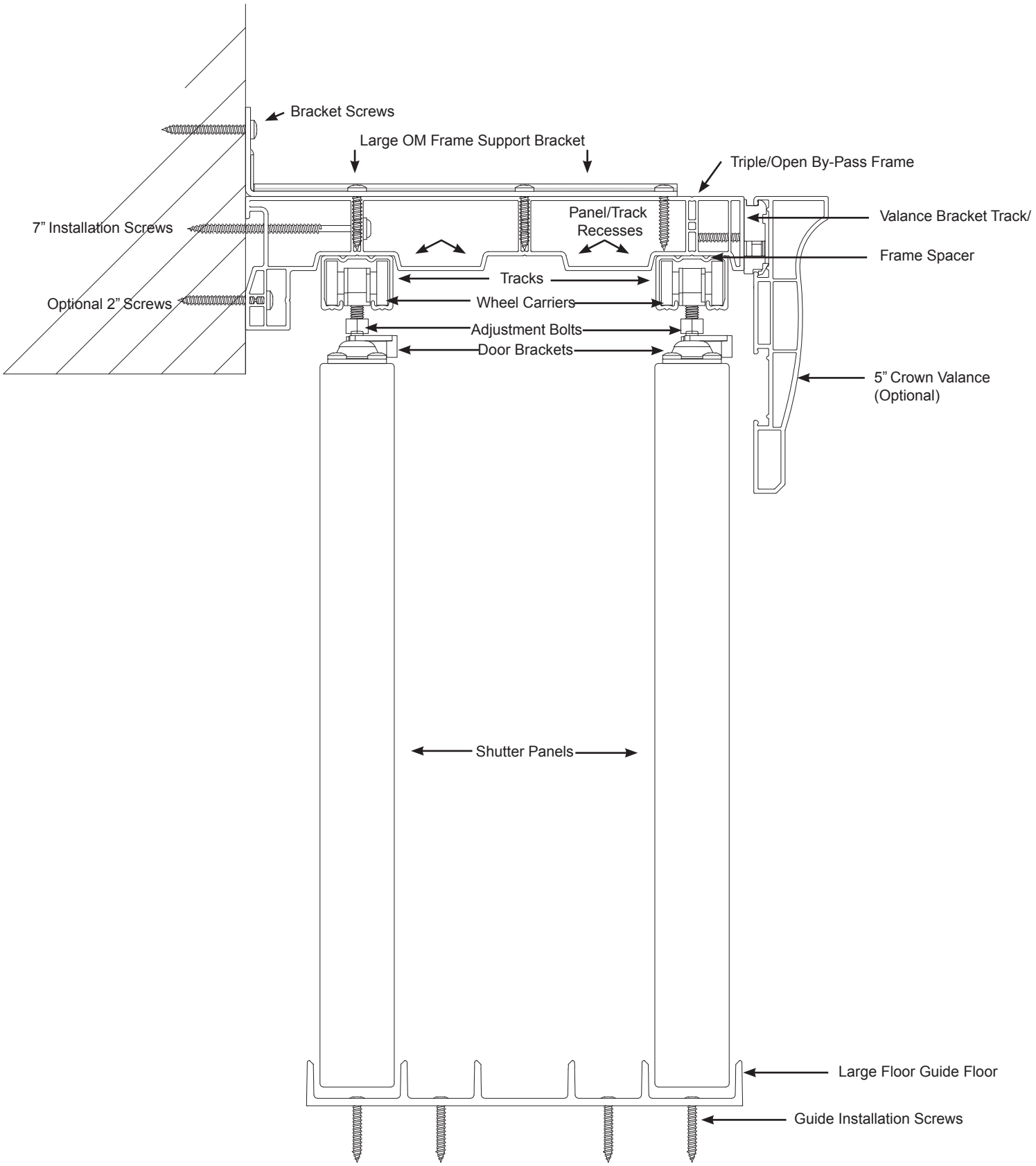

Diagram H - Frame Extension

1. The Track Frame Extension is used for By-Pass, Triple By-Pass and Bi-Fold frame systems.
2. Track Frame Extension increases the projection of the shutter by ¾”.
3. Orient the extension so that it mates with the back of the frame. Use an installation screw to attach the extension to the frame, as shown below

By-Pass Frame Extension increases the projection of the frame by 3/4”.

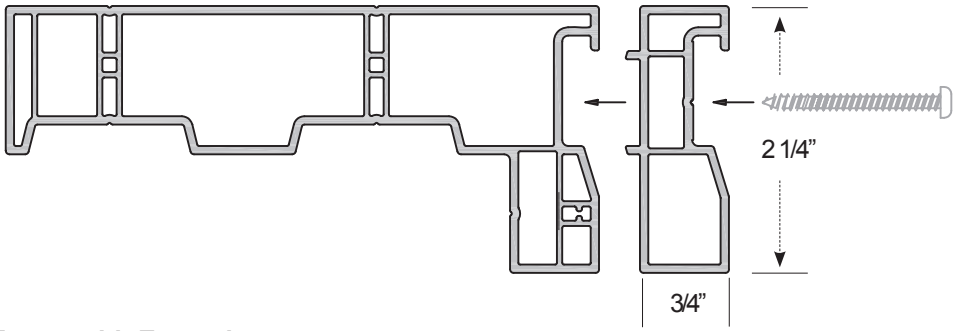

Open By-Pass Frame with Extension

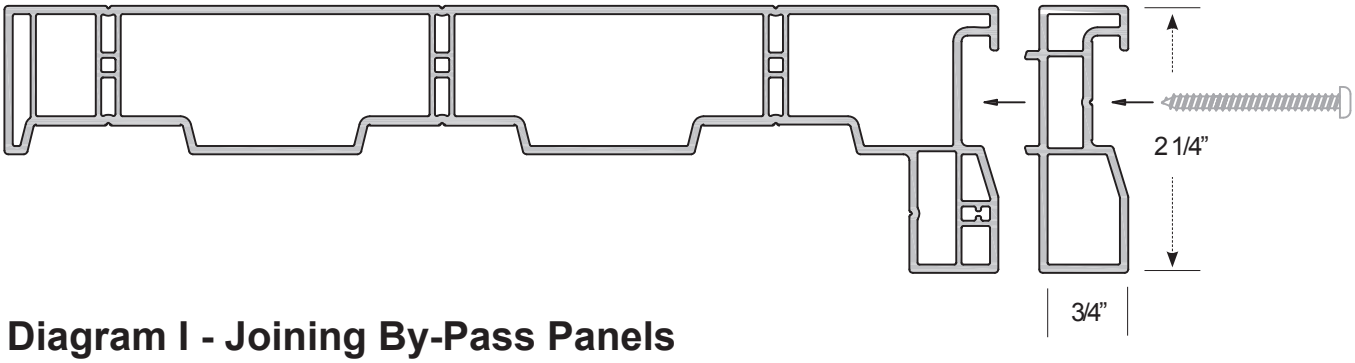

Diagram I - Joining By-Pass Panels

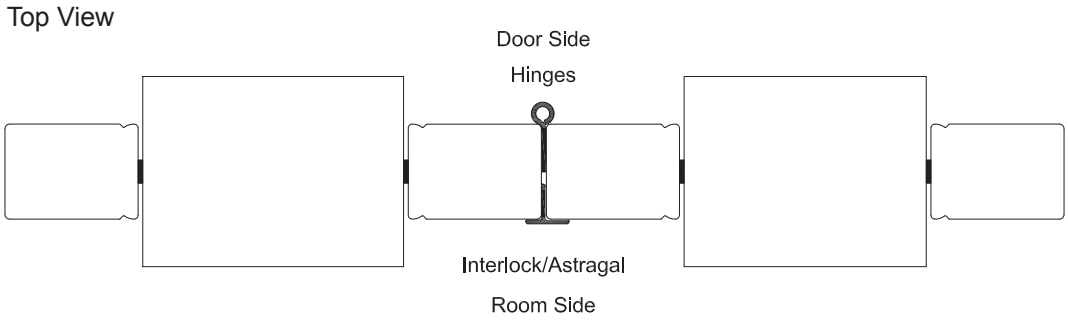

Joining By-Pass Panels: Hang each panel individually. Adjust both panels, making sure they are level with each other. Push the panels together and insert hinge pins into hinges located on the back side of the panels. This may require reaching between the louvers or opening the door and approach from the back of the shutter.

Diagram J - Light Block Between Panels

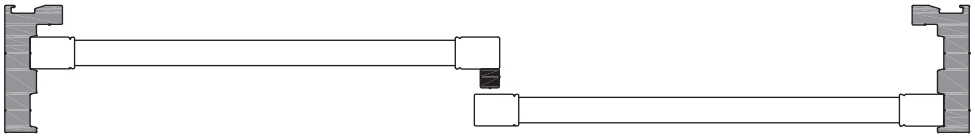

Standard or Triple By-Pass

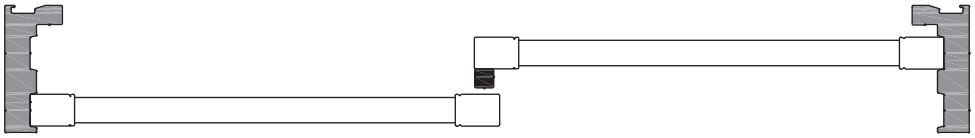

Note: Optional light block installs to the front of the rear panel(s) to prevent interference with the tilt bar.

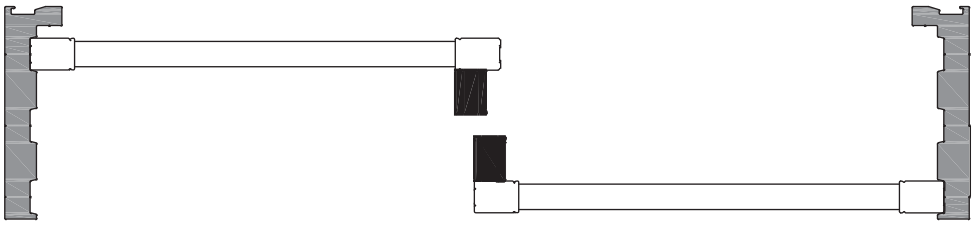

Open By-Pass

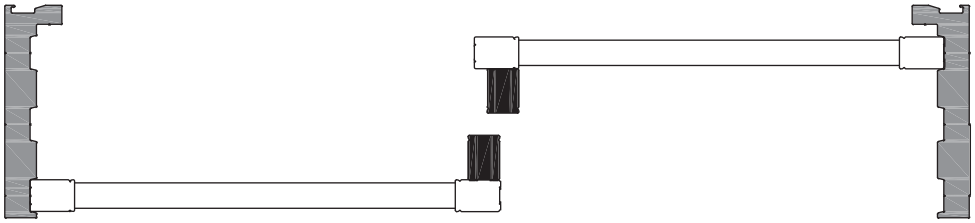

Diagram K - Assembly of Light Block Between Panels

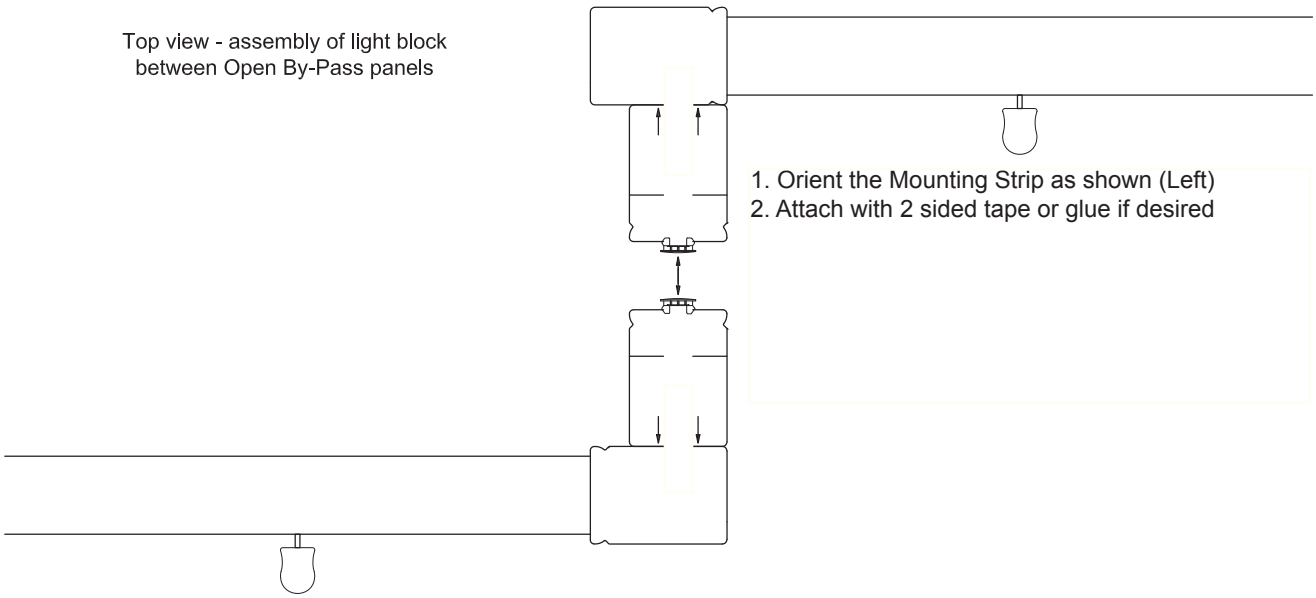

By-Pass Track System Order Form Instructions

* Line	* Room Location	* Control System	* Split Option	* Colors	Hinges B-Fold ONLY	* Louver Size	* Mount Type	* Frame Type	Width Ordered to 1/16"	Height Ordered to 1/16"	Panel Configuration	Frame Sides	Frame Ext.	Divider Rail			Valance		
														Type	#1	#2	Valance Type	Returns	Override
		G TC TOF	Distance Up Inches to Center Split	5136 5140 5151	P S B	2-1/2" 3-1/2" 4-1/2"	IM OM IF	BP ByPass (closed) BO ByPass (open) BT (Bypass) (Triple)	Max single panel 36" Max bi-fold panel 24" Min panel width 17" Inside Mount = Smallest Opening Size Outside Mount =Largest Frame Size	Max. Panel 120"	LR LCR LCCR	BYPASS 1 3 4	0 1 2	Standard (S) Deluxe (D)	Distance up required over 66"	Distance Up required over 96"	Standard (S) Crown (C)	OM OV Override	Indicate with Custom Returns

Line	Indicate line number start from #1 for ease of referring to a confirmation or sales quotation
Room	Indicate the room name keeping under 12 characters to allow for full name to show on the product labels · Indicate each room different for ease of sorting - (example Bed 1 Left, Bed 1 Center, Bed 1 Right)
Operating System	**G = Gear (Internal Gear System)** **TC= Tilt Bar Front Center (a function bar used to tilt louvers with option for Center Front)** **TOF= Tilt Bar Front Offset Hinge Side (a function bar used to tilt louvers with option for Offset Front)**
Split Option	Indicate the distance up from bottom of measurements to the center of the desired split location or specify louver count on top & bottom · Split may not be exact as requested. It will vary based on louver size · Split can be requested on any of the three operating systems at time of production · Splits should not be modified at installation as additional tension may be required
Colors	**· White / Cotton 5136 · Almond / Vanilla 5140 · Ivory / Pearl 5151**
Hinge Color	**P = Painted S = Stainless Steel B= Brass**
Louver Size	**2 ½" 3 ½" 4 ½"**
Mount Type	**OM** - Outside Mount - Factory takes no deductions - OM Installation holes are predrilled
	IM - Inside Mount - Factory takes 1/8" deductions on both width and height - IM Installation holes are predrilled · DirectConnect indicates terminology as "inside tight"
	IF – Inside Finished - Factory takes no deduction per frame side - IM Installation holes are predrilled
Frame Type	**BP** – By-Pass (CLOSED) **BO** – By-Pass (OPEN) **BT** – By Pass (Triple) **BF** – Bi-fold
Width	Ordered to the 1/16"
Height	Ordered to the 1/16"
	4" top and bottom rail are standard for all heights unless otherwise indicated 2" top and bottom rail are optional under 36" in height and must be requested in notes indicating line numbers
Panel Configuration	Indicate the Panel Configuration · For Bi-fold 2L= 2 panel Bi-Fold · For By-Pass 2L = 2 panels joined
Frame Side	Indicate numerically the number of frame sides (including any Sill) plus shade in the sides required
Ext	If required - Indicate the number of Frame Extensions
Divider Rail Type	**S** = Standard **D** = Deluxe with built in pull handle
Divider Rail	A divider rail is required for support with a varied number of rules · A divider rail is required for other application for heights over 66", a second rail for over 96" · When a divider rail is required the minimum distance between any rail is 20"
Valance Type	**S** – Standard 2 ½" (for Bi-fold) **C** – Crown 5" (for By-Pass)
Valance Returns	**OM** - Return Length (from front of frame to back of frame) BF = 3" BP = 5" BO & BT = 8 3/8" **OV** - Valance comes with returns with requested return length - can be for OM, IM or IF applications **IM** - There are no returns when IM is indicated - Valance is cut at ordered width less 1/8" - Order OV if returns required **IF** - There are no returns when IF is indicated - Valance is cut at ordered width - Order OV if returns required
Override	Must indicate the length of the valance return - measure from front of frame to distance back required Computer will account for the valnce corner miter as well as valance clip projection
Uneven Panel Widths	By-Pass only Provide the panels sizes required · If panels or joined panels are to be different sizes
Frame Cut outs Bi-Fold	All cutouts are 7" - If the cut out required is over 7", the full height or full width of the frame must be cut out. " · Removing the frames light block & frame back · Side frame cutouts are measured from the bottom IM sill or OM frame to the starting point of the cut out · Top or Bottom cut-outs are measured from the left IM Sill or OM frame to the starting point of the cut out · If the cut out required is over 7", the full height or full width of the frame must be cut out · Surcharges are applicable
Order Acknowledgement	Items that do not meet product specification as detailed in the manual, will be manufactured with a void warranty

Uneven Panel Widths (ByPass Only)						
Line #	Panel 1	Panel 2	Panel 3	Panel 4	Panel 5	Panel 6

I

TRIPLE BY-PASS TRACK SYSTEM

Triple By-Pass Track System Diagram - 3 1/2” Standard

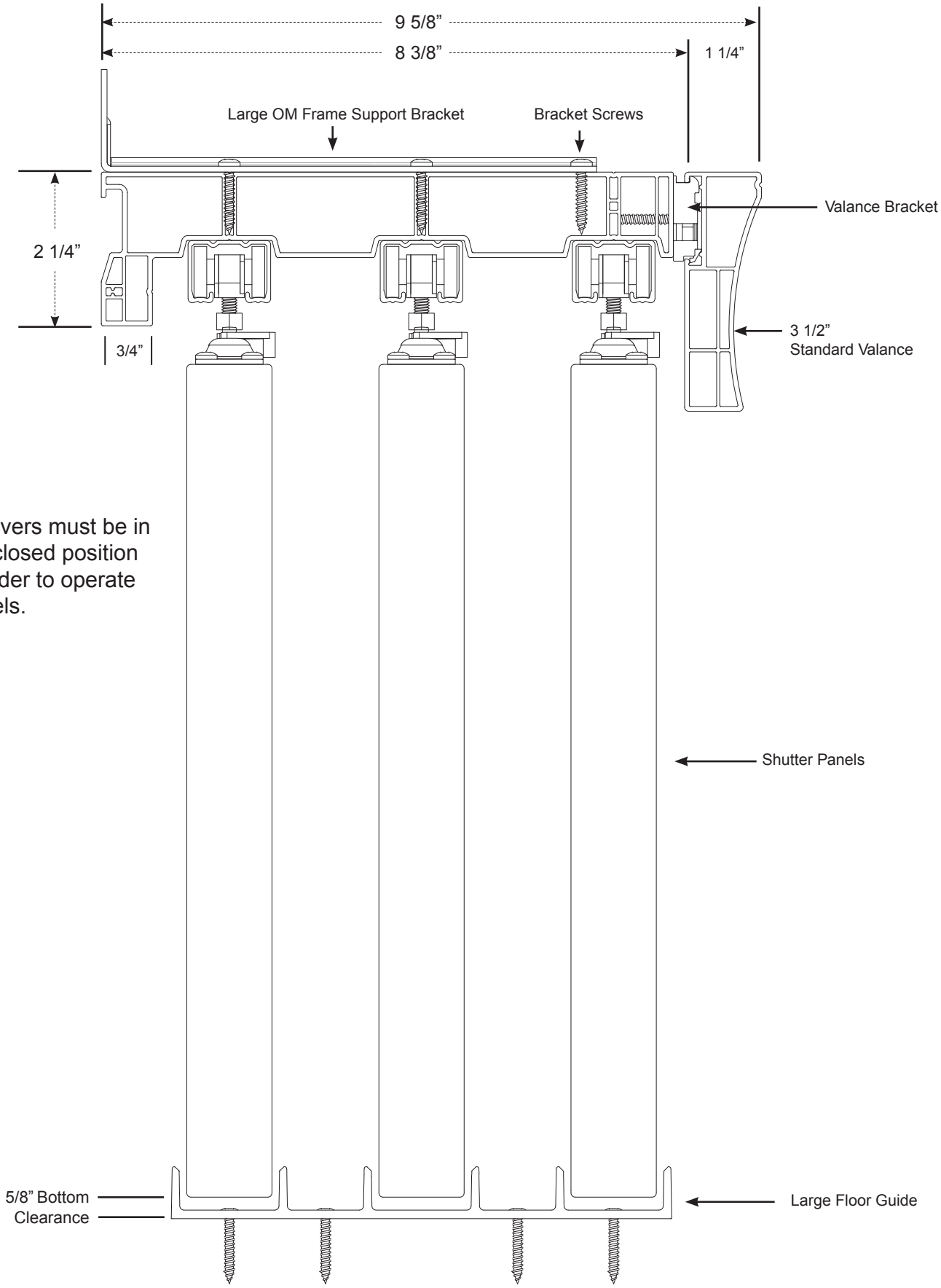

*Louvers must be in the closed position in order to operate panels.

Triple By-Pass Track System Diagram - 5” Crown

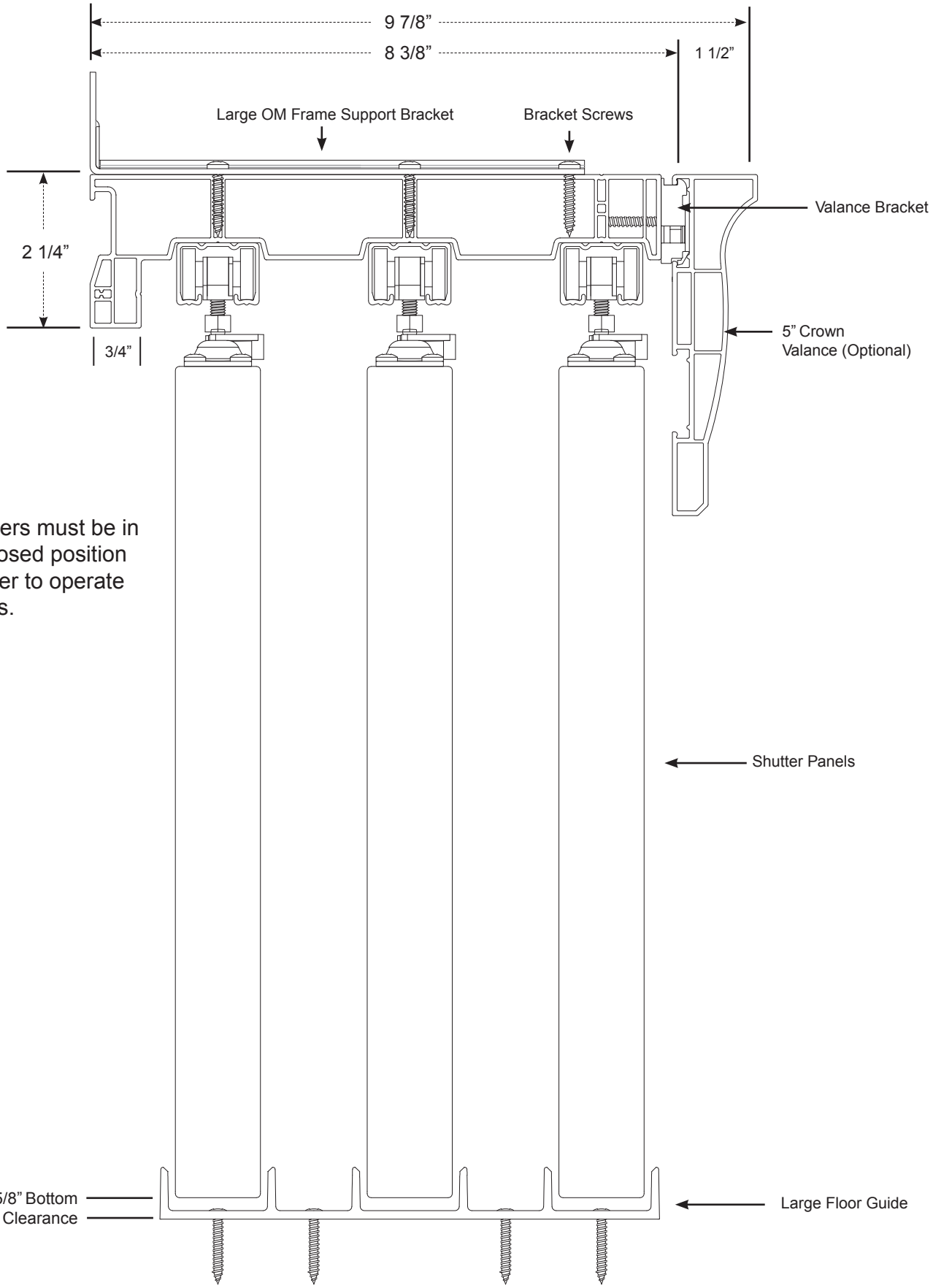

*Louvers must be in the closed position in order to operate panels.

Three Panel By-Pass

P3TB-1L1M1R

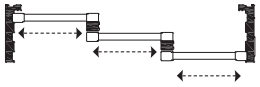

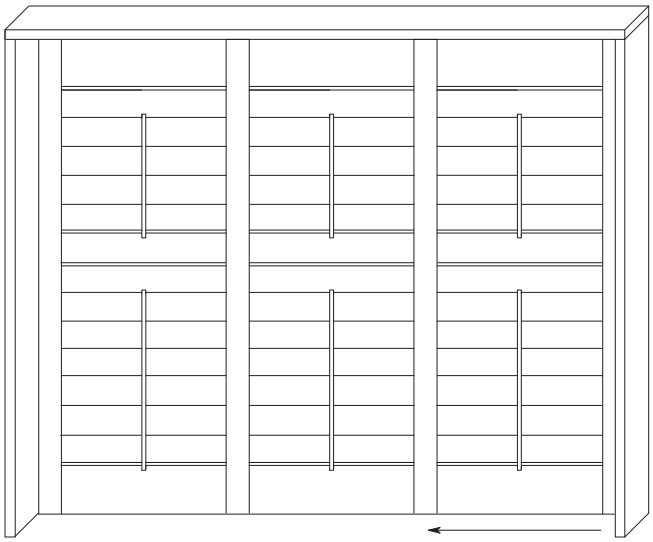

- Minimum Width: 36”
- Maximum Width: 108”
- Minimum Height: 20”
- Maximum Height: 120”

Four Panel By-Pass

P4TB-1L2M1R

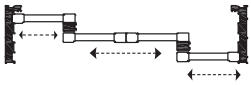

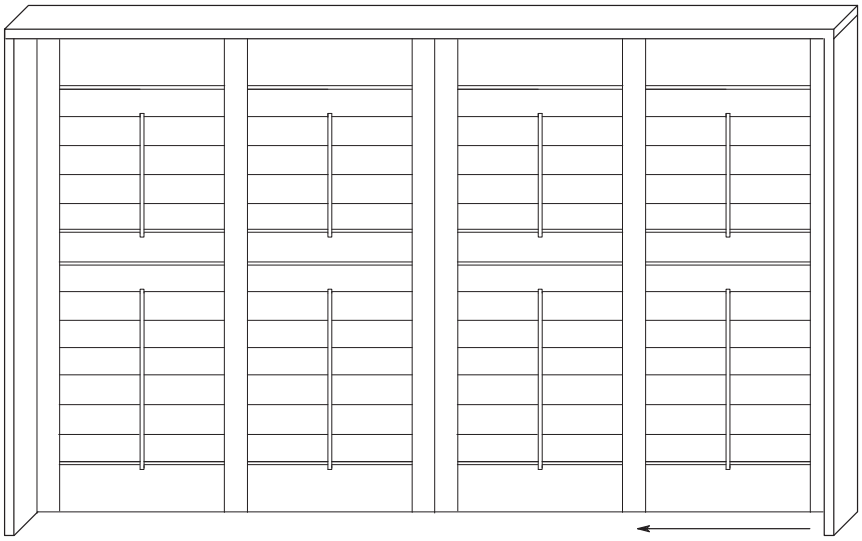

- Minimum Width: 48”
- Maximum Width: 144”
- Minimum Height: 20”
- Maximum Height: 120”

Five Panel By-Pass

P5TB-1L1M1C1M1R

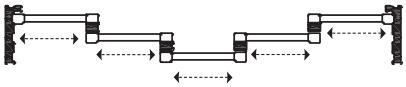

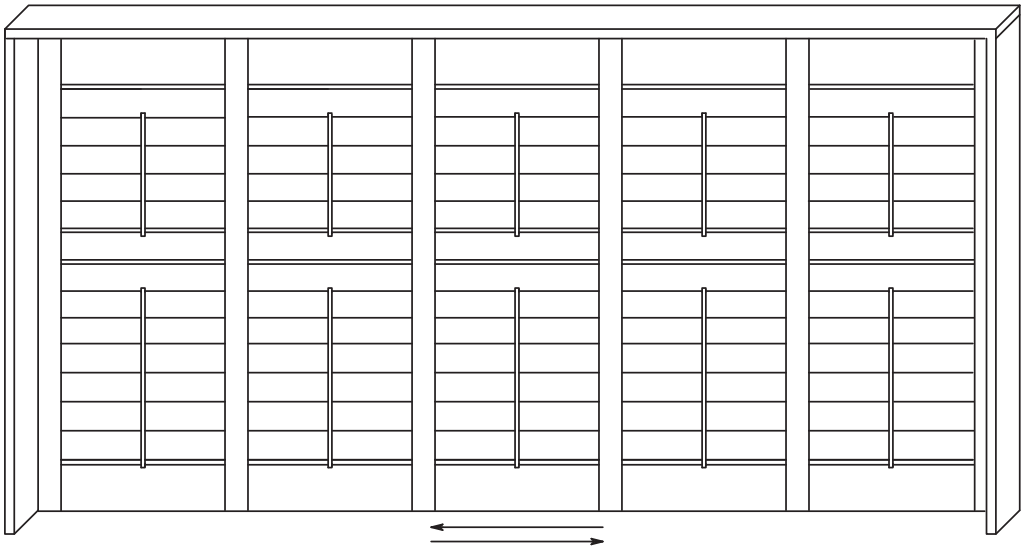

- Minimum Width: 60”
- Maximum Width: 180”
- Minimum Height: 20”
- Maximum Height: 120”

Six Panel By-Pass

P6TB-1L1M2C1M1R

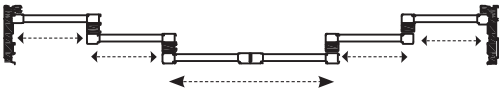

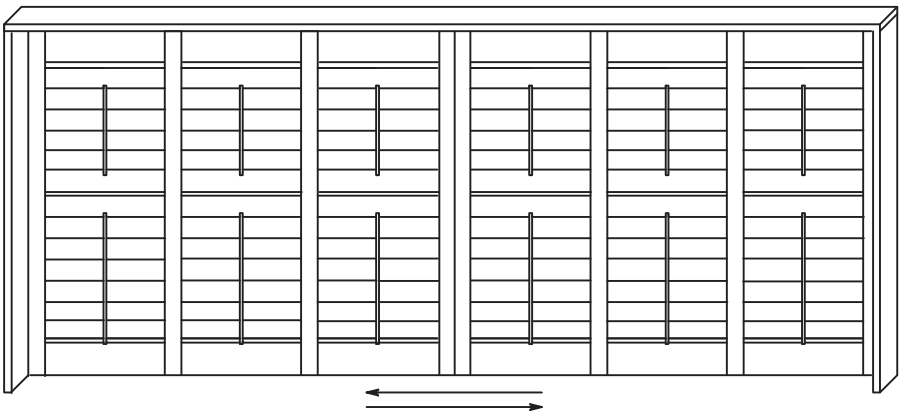

- Minimum Width: 72”
- Maximum Width: 180”
- Minimum Height: 20”
- Maximum Height: 120”

P6TB-2L2M2R

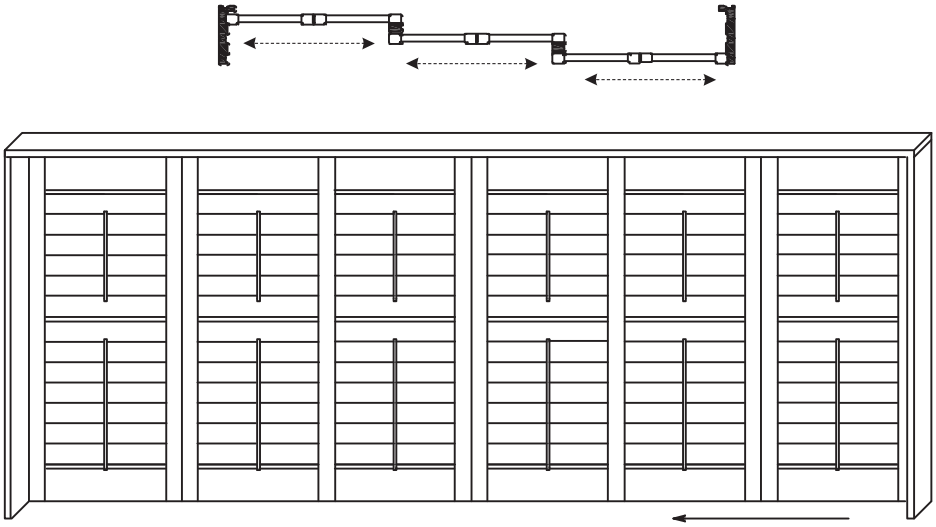

- Minimum Width: 72”
- Maximum Width: 180”
- Minimum Height: 20”
- Maximum Height: 120”

P6TB-1L1M1C1C1M1R

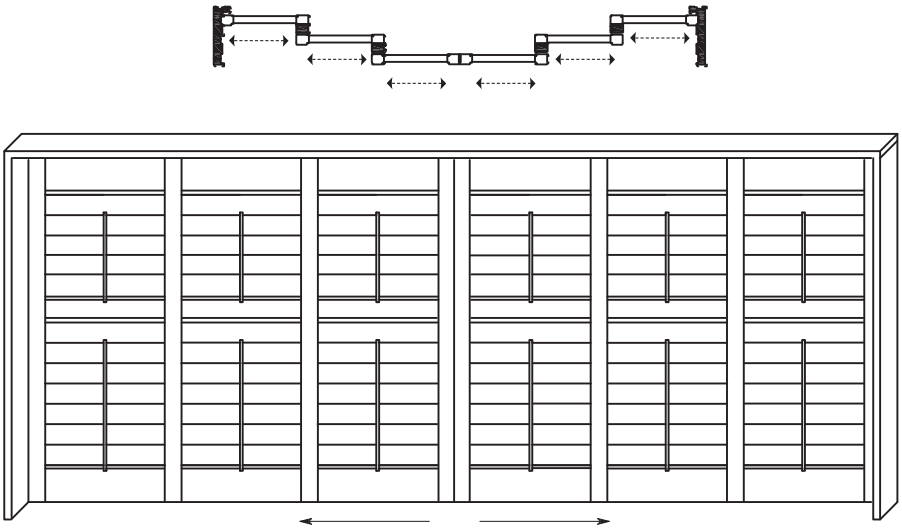

- Minimum Width: 72”
- Maximum Width: 180”
- Minimum Height: 20”
- Maximum Height: 120”

P7TB-2L1M1C1M2R

- Minimum Width: 84”
- Maximum Width: 180”
- Minimum Height: 20”
- Maximum Height: 120”

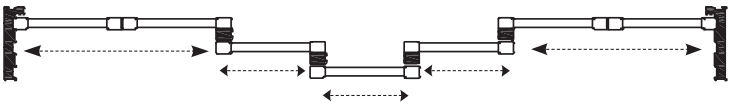

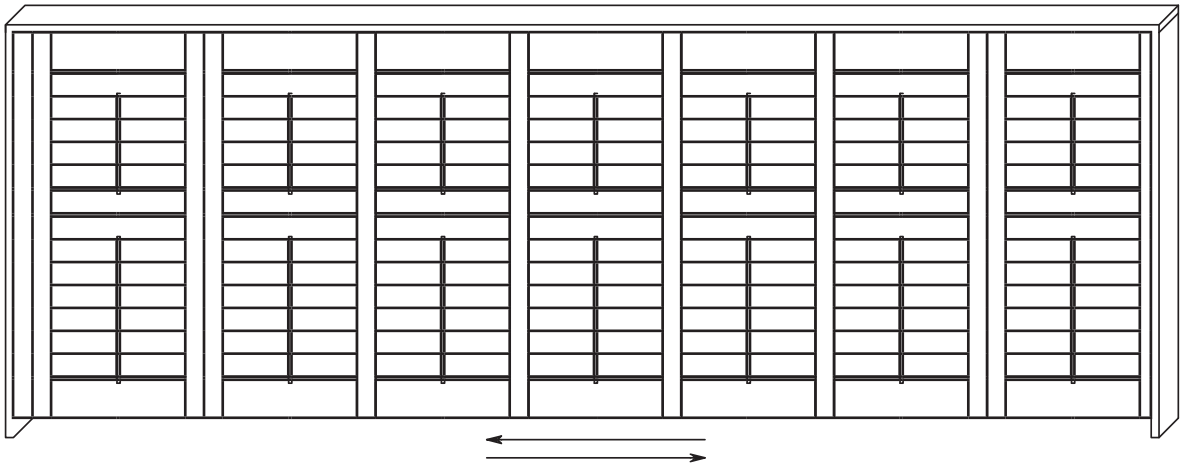

P7TB-1L2M1C2M1R

- Minimum Width: 84”
- Maximum Width: 180”
- Minimum Height: 20”
- Maximum Height: 120”

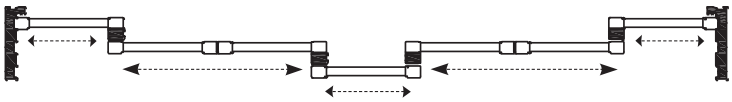

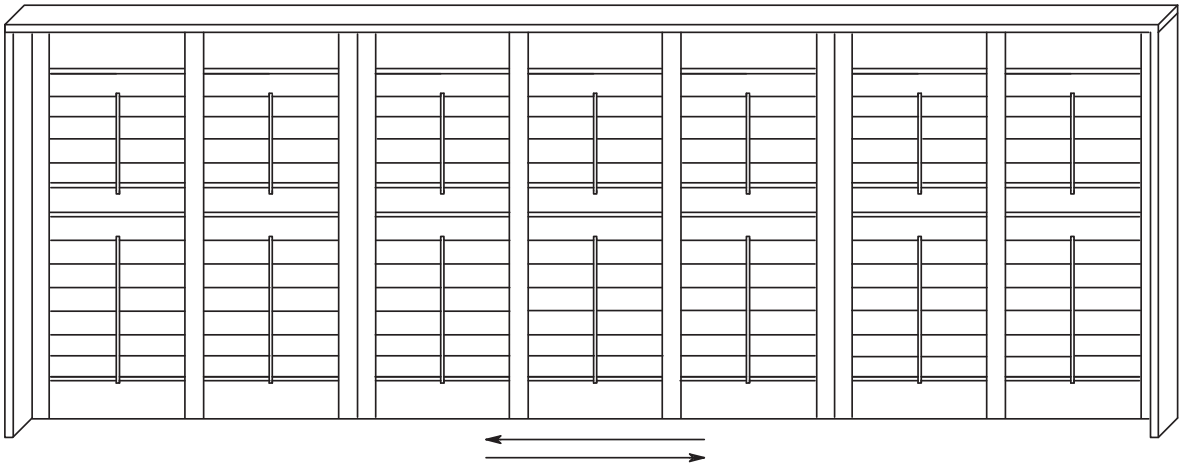

P8TB-1L2M2C2M1R

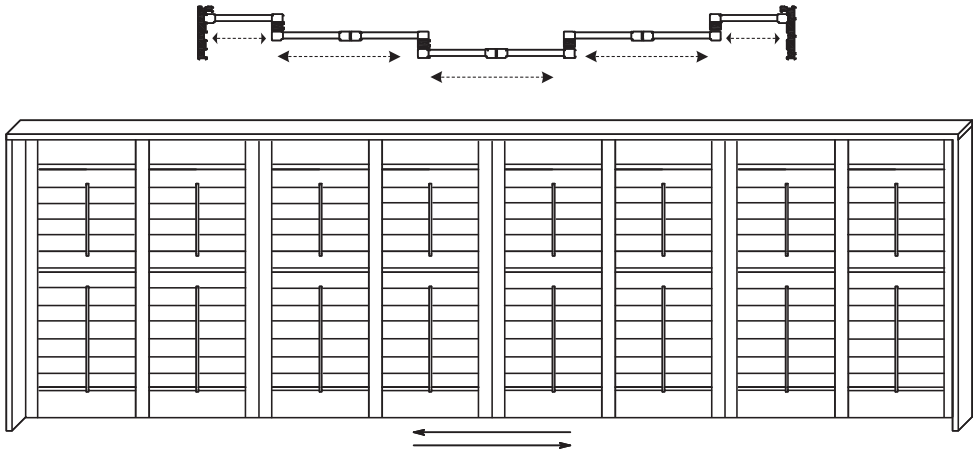

- Minimum Width: 96”
- Maximum Width: 192”
- Minimum Height: 20”
- Maximum Height: 120”

P8TB-2L1M2C1M2R

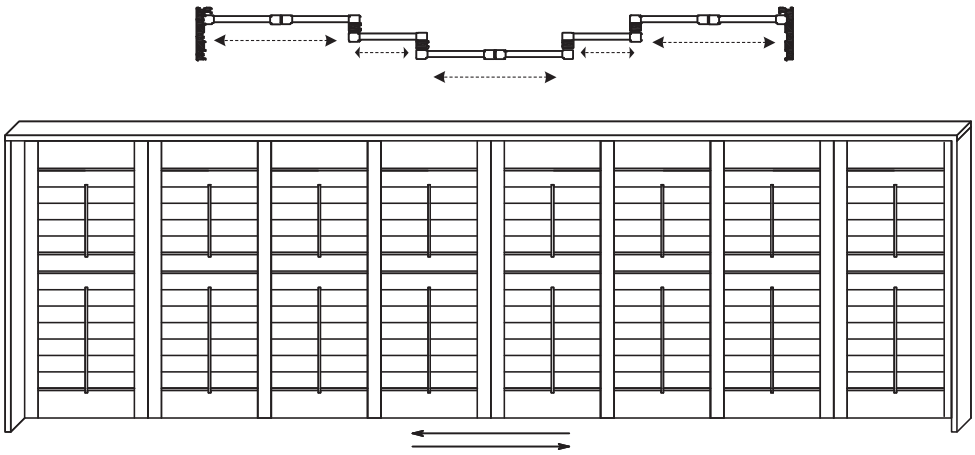

- Minimum Width: 96”
- Maximum Width: 192”
- Minimum Height: 20”
- Maximum Height: 120”

P8TB-1L1M2C2C1M1R

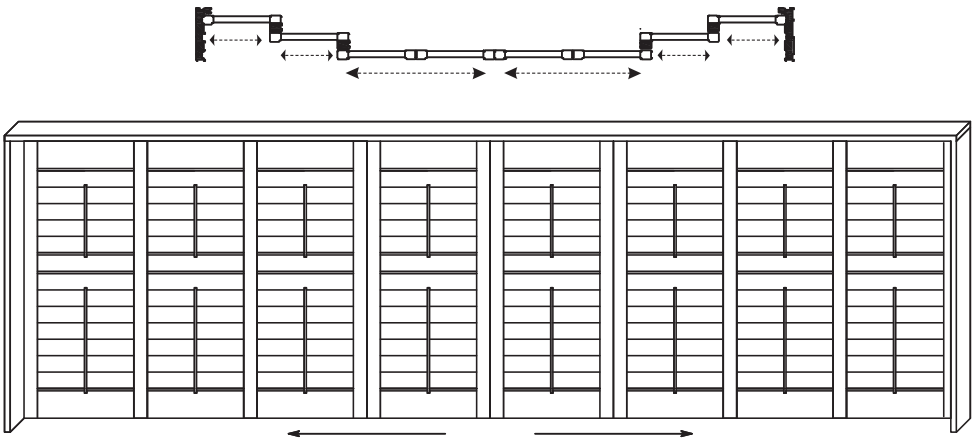

- Minimum Width: 96”
- Maximum Width: 192”
- Minimum Height: 20”
- Maximum Height: 120”

Triple By-Pass Clearance Chart

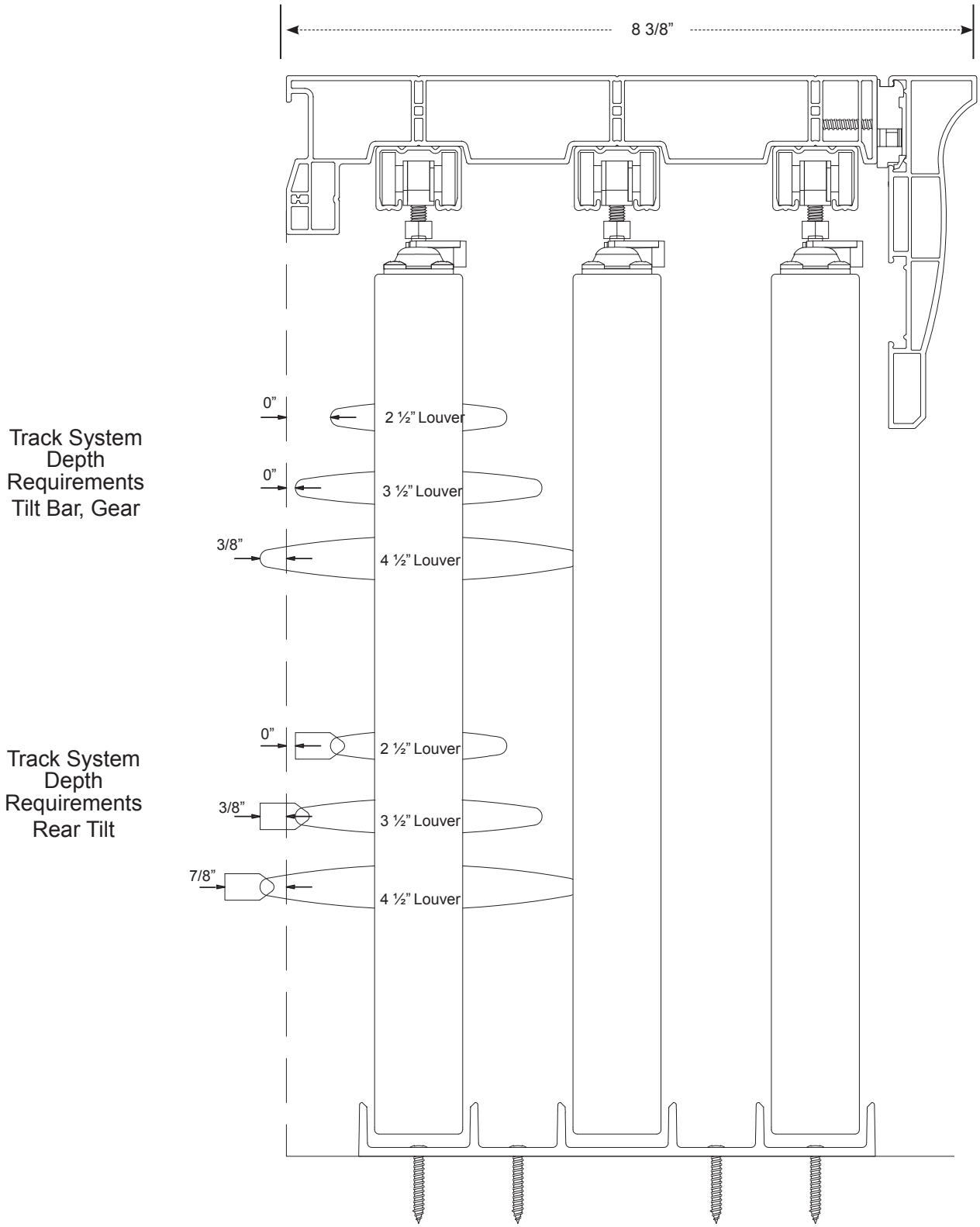

Triple By-Pass Measuring Instructions

- Inside mounts must have a jamb depth of 2”.
- Inside mounts may be ordered without side frames (jamb depth must be 4” minimum).
- Outside mount will project 9 7/8” (including Crown valance) from wall.

Note: Shutter louvers cannot open when panels are in front of one another.

Diagram A

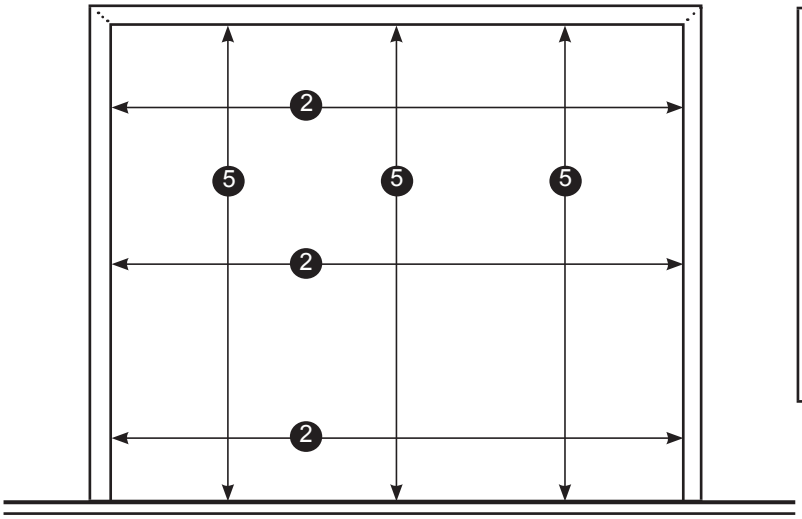

Diagram B

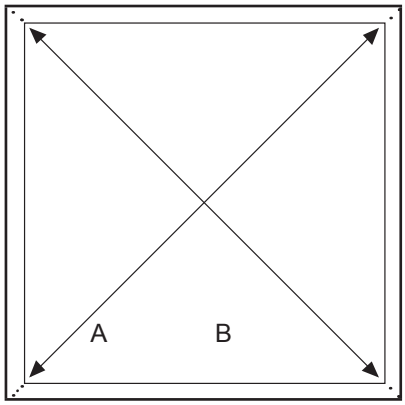

❸ Diagonal squareness check

❶ **CHOICE OF FRAME SIDES AND LOUVER**
Use the sample shutter panels to determine proper louver rotation. Check that your chosen louver will overcome any obstruction by placing the frame and panel in front of the obstructions. It is recommended that an inside mount have a minimum jamb depth of 2”. A one sided frame (top) can be ordered for this application. Indicate TB in the frame options section of the Order Form. If additional projection is required, request extension. Each extension is 3/4”.

❷ **CHECK FOR SQUARENESS**
Measure on the diagonal (see Diagram B). If the diagonal measurements are not identical, an inside mount is not recommended. An alternative way to check for a perfectly square window, simply place your panel in each of the four corners. If you find the panels are not flush in all corners, the window opening is not square.

❸ **MEASURE INSIDE WIDTH**
Measure in three places (top, middle, bottom) and record the smallest measurement onto a Order Form if the application is for an inside mount. For an outside mount, a minimum of 2 1/4” is required to be added to each side that a frame is required.

❹ **MEASURE INSIDE HEIGHT**
Measure in three places (left, middle, right) and record the smallest measurement onto a Order Form if the application is for an inside mount. For an outside mount a minimum of 2 1/4” is required to be added to the top and/or bottom that a frame is required.

ONLY IF A DIVIDER RAIL REQUESTED
The measurement recorded is determined from the bottom sill to the middle of where the divider rail is to be located. One divider rail is required for panels over 66” with a maximum 66” between the middle of the divider rail and either top or bottom rail.

❺ Two divider rails are required for panels over 96” in height with a maximum 66” between any two rails.

CHOICE OF PANEL CONFIGURATION
Determine from pages I3 to I7. Complete the remainder of the Order Form. Sill Frames and Double Hungs are not applicable with the By-pass System.

❻ **ORDER VALANCE**
Choose between the 3 1/2” Standard Valance or 5” Crown Valance and select the appropriate valance returns on the track system order form. See page I13-14. Ordered as OM valance return standard length will end at the back of the frame.

❼ If OM valance return is requested to be other than standard, then measure the length from the front of the frame to the requested end point. Enter the distance under OV on the order form. If IM, note that there is no valance return.

Triple By-Pass Installation Instructions

1. **FRAME ASSEMBLY (for 3 or 4 sided applications)**
   Set the provided 3" screws into the assembly holes in the top frame. Align the screws with the screw ports inside the side frames (fasten tightly).
2. **FRAME SPACERS**
   Spacers are glued or placed at the ends of any top frame in which side frames are present. The spacers are located in the panel/track recesses of the top frame. The assembly screws will pass through the spacer and into the side frames.
3. **INSTALLATION HOLES**
   Once the frames are assembled, installation holes are required by using a 3/8" drill bit (if not pre-drilled).
   A) For an inside mount, drill a 3/8" hole through the first layer of Polyresin 3, within the mounting area every 10" starting at each end of the frame.
   B) For an outside mount, drill a 3/8" hole through the first layer of Polyresin 3 at the front edge of the reveal of the frame every 10.
4. **FRAME INSTALLATION**
   A) For an inside mount, fasten the top frame to the opening, making sure it is level; shim to level if necessary.
   B) For an outside mount, set the frame against the wall. Level the top and fasten the top frame to the wall with the provided installation screws.
5. **ALUMINUM TRACKS**
   Mount aluminum tracks to the extreme left of the opening of the frame by screwing through the pre-drilled holes in the track to the extrusion indicator lines on the underside of the top frame.
6. **WHEEL CARRIERS**
   Insert wheel carriers inside each aluminum track. Two carriers are assigned to each panel so check the panel configuration to determine the correct number of carriers in each track.
7. **ATTACH OPTIONAL LIGHTBLOCK BETWEEN PANELS**
   For Triple By-pass, one piece of ¾" x ¾" mounting strip is mounted at the back of the interior edge of each front panel. Drill a 3/8" holes starting at the top, every 20" through the first two layers of Polyresin 3. Screw the mounting strip to the panel and cap holes with button plugs.

   Note: Mounting strips are 1" shorter than the panels so there is no interference with the floor guides
8. **HANG SHUTTERS**
   Push the door plates onto the adjustable nut of the wheel carriers. Lock the panels in place by rotating the plastic slide around the neck of the wheel carrier adjustable nut. To level the panels, turn the adjustable nut of the wheel carrier with the provided wrench tool.
9. **SECURE SIDE FRAMES IF APPLICABLE**
   Mount each side frame with the mounting screws provided so that the frames are plumb to the hanging panel. Cover the 3/8" holes with the button plugs.
10. **ATTACH DOUBLE PANELS IF APPLICABLE**
    When two panels are to be attached, they are connected using hinges. Push the panels together and make sure the hinges align (adjust panels heights as needed). Open louvers and reach through to set hinge pins to connect panels or open the door and insert the hinge pins from the back side of the panels.
11. **ATTACH VALANCE IF APPLICABLE**
    Attach valance brackets to the front of the frame using the included #8 x 1" screws, the installation holes should be pre-drilled. Once all brackets are secure, position the channel on the back of the valance so that it rests on the bracket. The valance will need to be on a 45° angle, with the bottom of the valance farther into the room. Rotate the valance down to a vertical orientation until locked into all brackets. If the valance and return tilt, then use a hinge shim on the valance clip to level.
12. **OPTIONAL FLOOR GUIDE(S)**
    Install floor guide(s) in-between each set of moving panels. The guides prevent the doors from swinging forward into the room or back into the opening.Large floor guides are used for triple by-pass shutters.

Diagram C - Frame Assembly

1. Insert the provided 3” screws though the top frame
2. Line up the screw through the screw ports inside the side frames (fasten tightly)

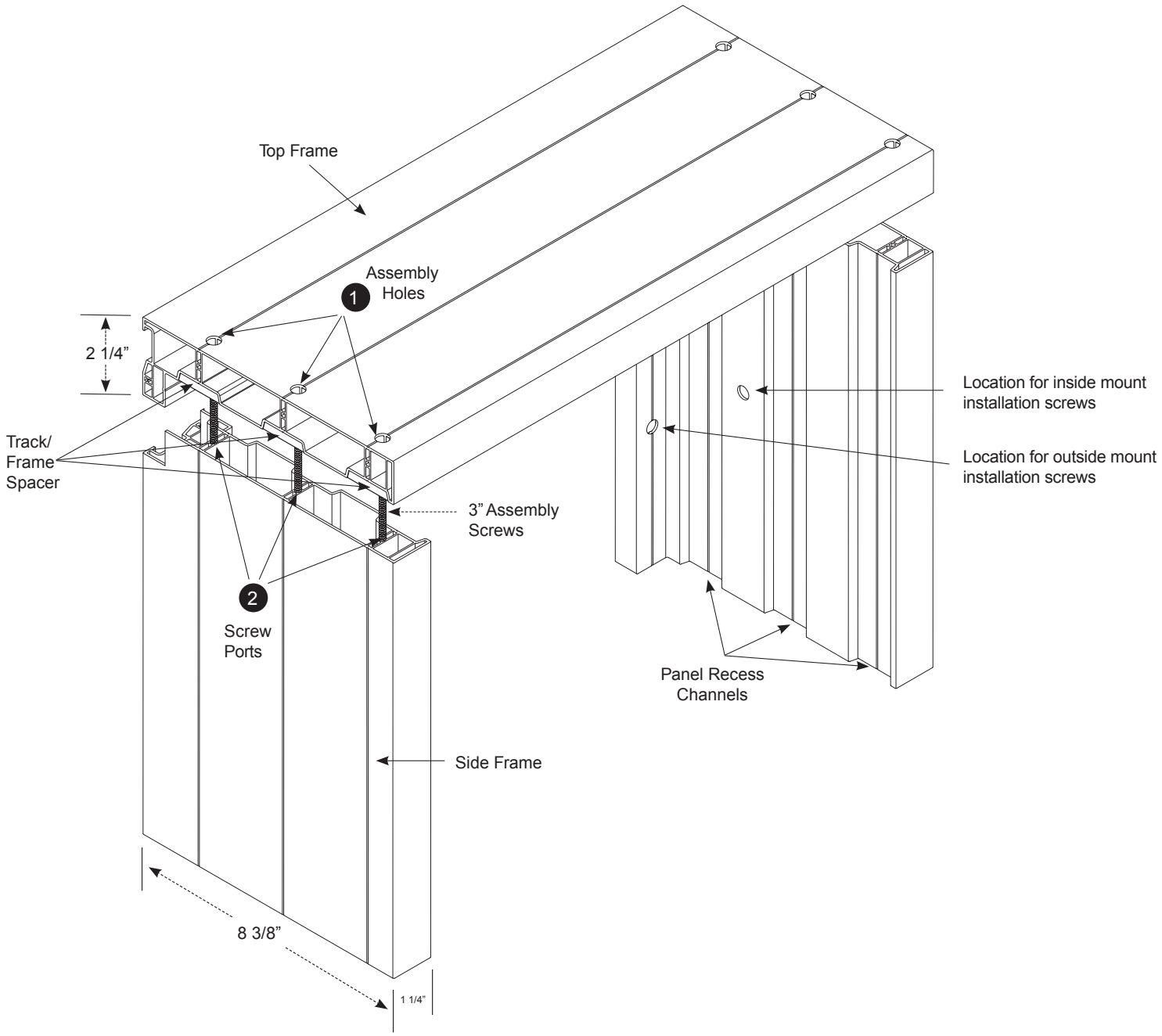

By-Pass Track System Diagrams

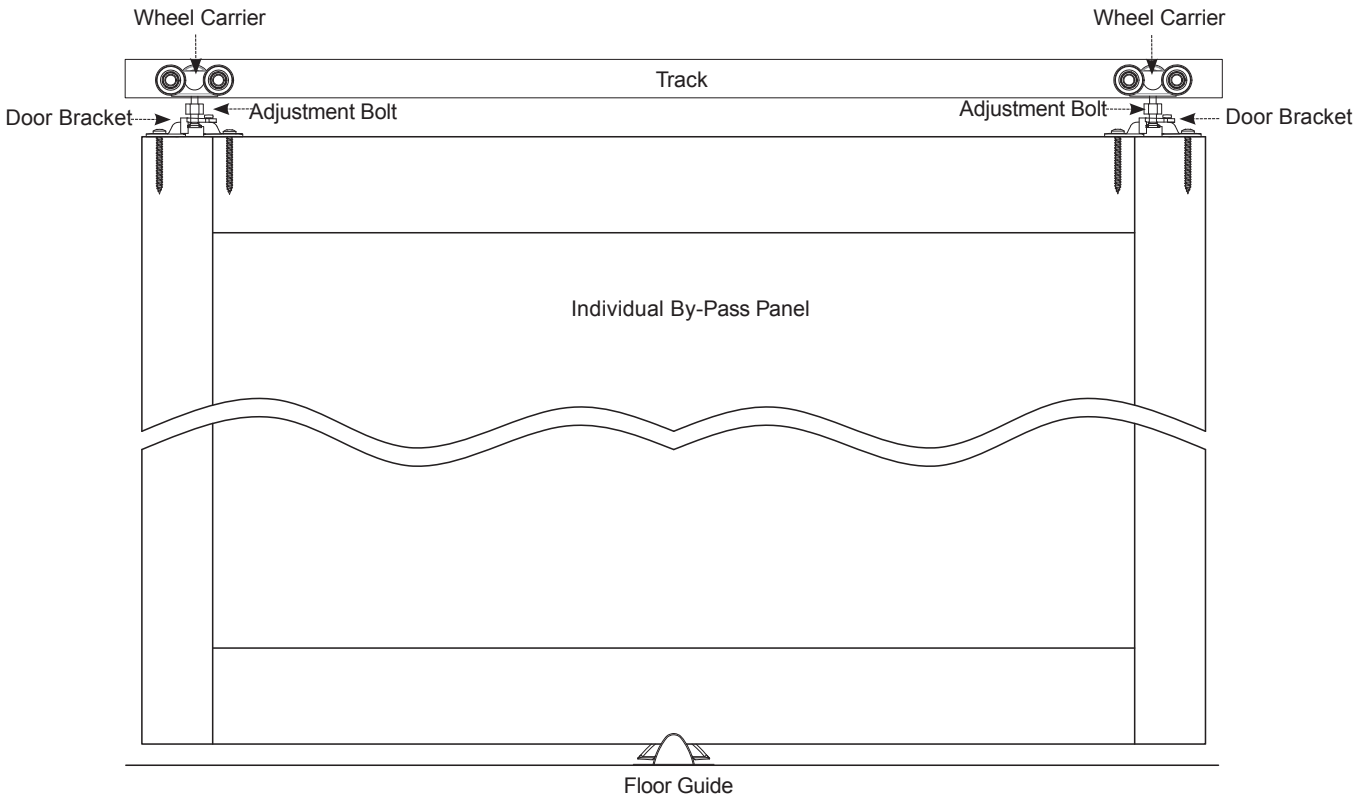

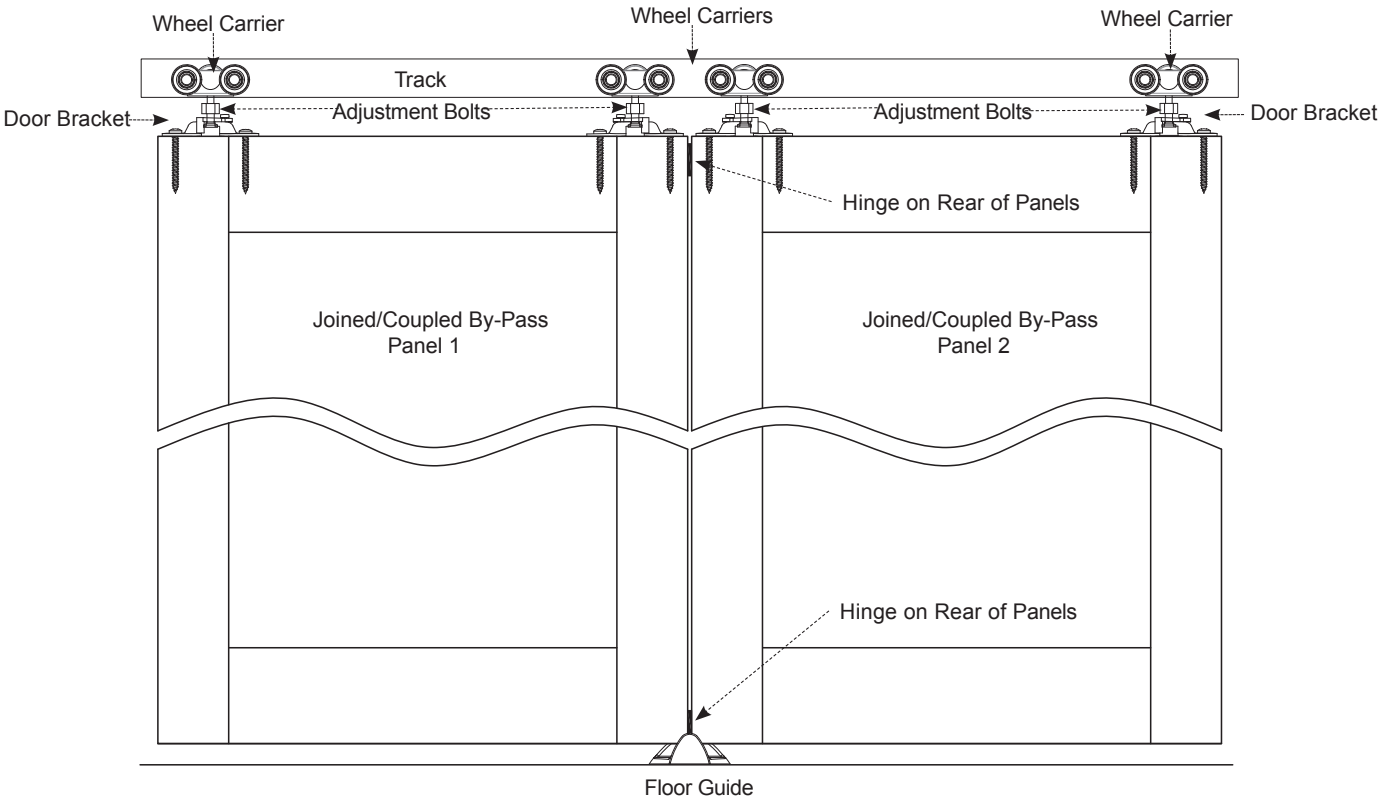

Diagram D - Inside Mount Application

Note: With track secured to the frame, remove every other 1” track screw. Replace each with a #8 x 2” screw.

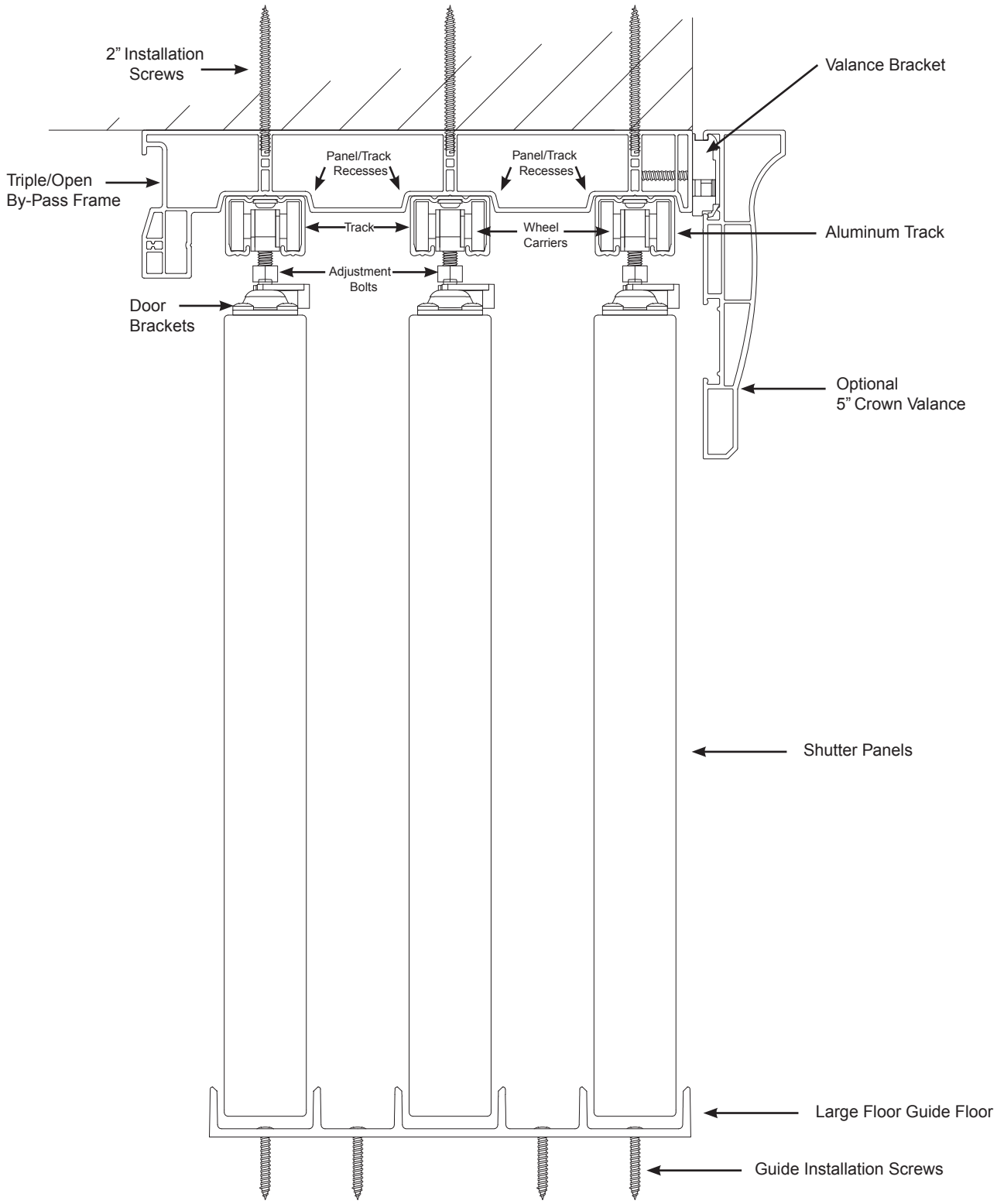

Diagram E - Outside Mount Application

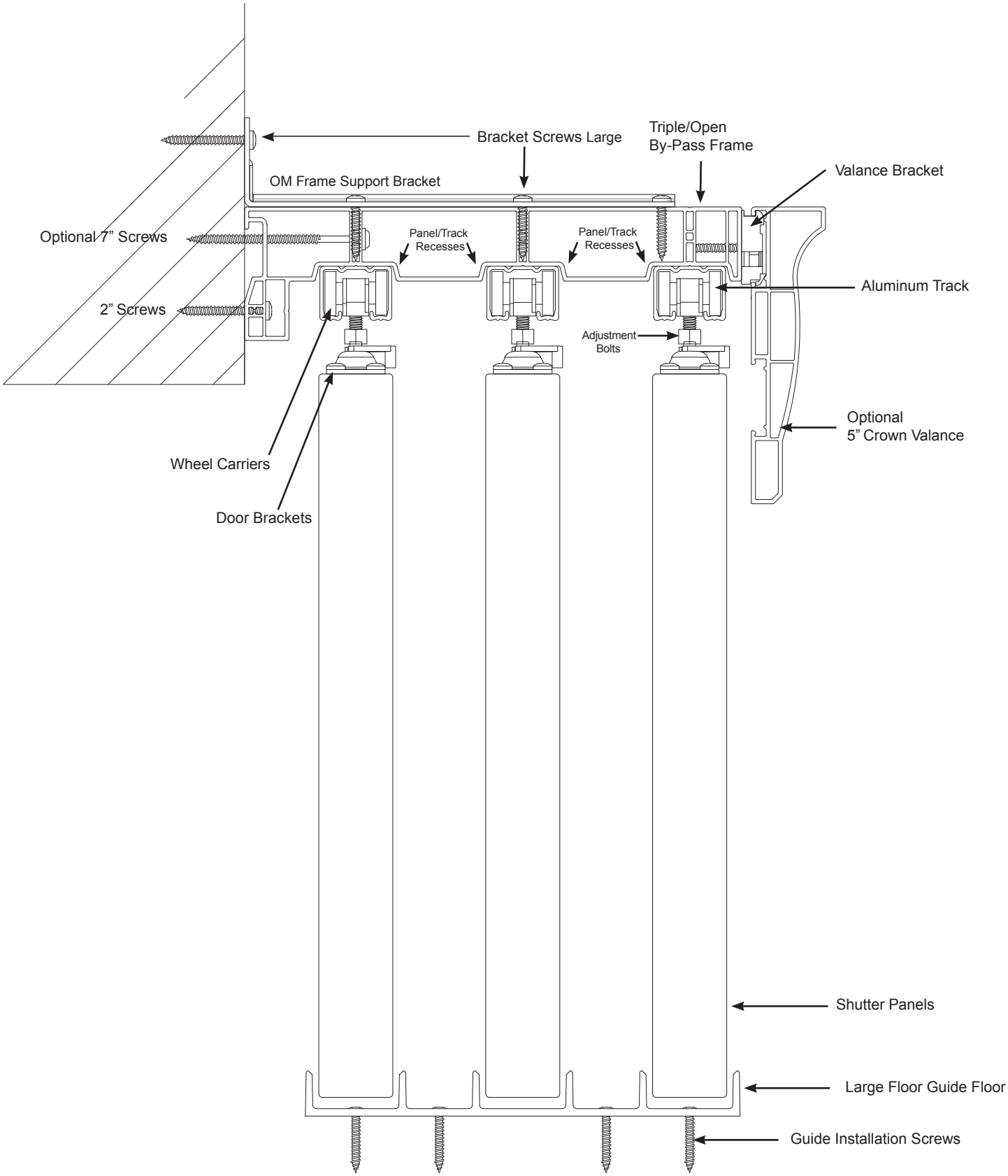

Diagram F - Frame Extension

1. The Track Frame Extension is used for By-Pass, Triple By-Pass and Bi-Fold frame systems.
2. Track Frame Extension increases the projection of the shutter by ¾”.
3. Orient the extension so that it mates with the back of the frame. Use an installation screw to attach the extension to the frame, as shown below.

Triple By-Pass Frame Extension increases the projection of the frame by 3/4”.

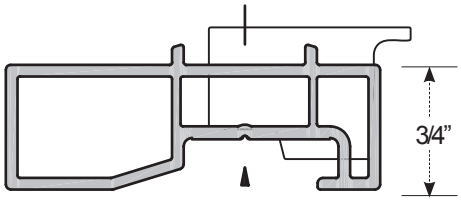

Triple By-Pass Frame with Extension

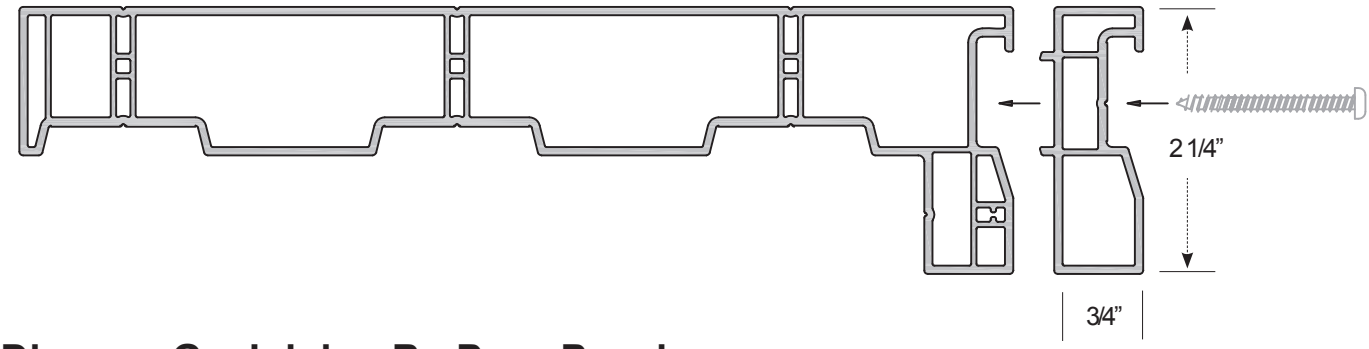

Diagram G - Joining By-Pass Panels

Top View

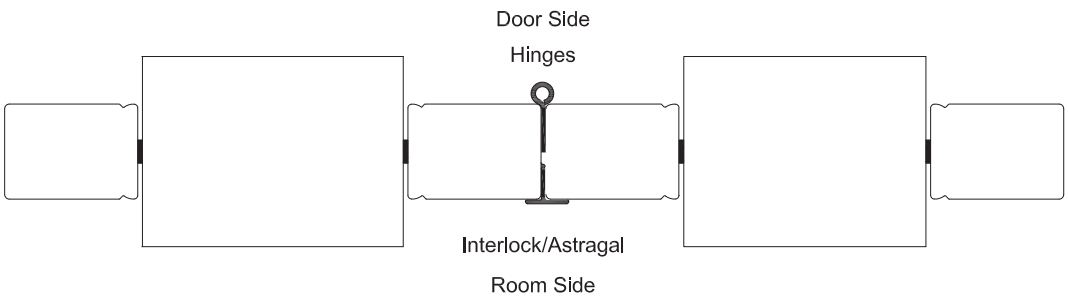

Joining By-Pass Panels: Hang each panel individually. Adjust both panels, making sure they are level with each other. Push the panels together and insert hinge pins into hinges located on the back side of the panels. This may require reaching between the louvers or opening the door and approach from the back of the shutter.

Diagram H - Light Block Between Panels

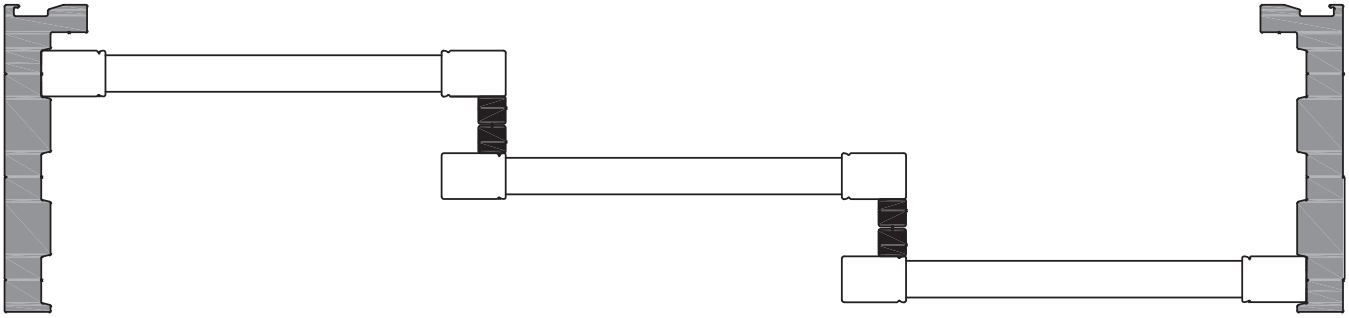

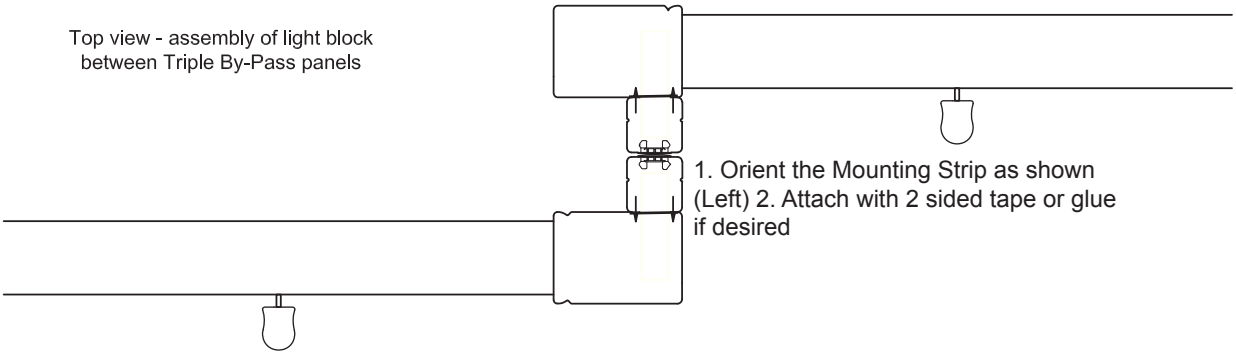

Track System Order Form Instructions

* Line	* Room Location	* Control System	* Split Option	* Colors	Hinges B-Fold ONLY	* Louver Size	* Mount Type	* Frame Type	Width Ordered to 1/16"	Height Ordered to 1/16"	Panel Configuration	Frame Sides	Frame Ext.	Divider Rail			Valance		
														Type	#1	#2	Valance Type	Returns	Override
		G TC TOF	Distance Up Inches to Center Split	5136 5140 5151	P S B	2-1/2" 3-1/2" 4-1/2"	IM OM IF	BP ByPass (closed) BO ByPass (open) BT (Bypass) (Triple)	Max single panel 36" Max bi-fold panel 24" Min panel width 17" Inside Mount = Smallest Opening Size Outside Mount =Largest Frame Size	Max. Panel 120"	LR LCR LCCR	BYPASS 1 3 4	0 1 2	Standard (S) Deluxe (D)	Distance up required over 66"	Distance Up required over 96"	Standard (S) Crown (C)	OM OV Override	Indicate with Custom Returns

Line	Indicate line number start from #1 for ease of referring to a confirmation or sales quotation
Room	Indicate the room name keeping under 12 characters to allow for full name to show on the product labels · Indicate each room different for ease of sorting - (example Bed 1 Left, Bed 1 Center, Bed 1 Right)
Operating System	**G = Gear (Internal Gear System)** **TC= Tilt Bar Front Center (a function bar used to tilt louvers with option for Center Front)** **TOF= Tilt Bar Front Offset Hinge Side (a function bar used to tilt louvers with option for Offset Front)**
Split Option	Indicate the distance up from bottom of measurements to the center of the desired split location or specify louver count on top & bottom · Split may not be exact as requested. It will vary based on louver size · Split can be requested on any of the three operating systems at time of production · Splits should not be modified at installation as additional tension may be required
Colors	**· White / Cotton 5136 · Almond / Vanilla 5140 · Ivory / Pearl 5151**
Hinge Color	**P = Painted S = Stainless Steel B= Brass**
Louver Size	**2 ½" 3 ½" 4 ½"**
Mount Type	**OM** - Outside Mount - Factory takes no deductions - OM Installation holes are predrilled
	IM - Inside Mount - Factory takes 1/8" deductions on both width and height - IM Installation holes are predrilled · DirectConnect indicates terminology as "inside tight"
	IF – Inside Finished - Factory takes no deduction per frame side - IM Installation holes are predrilled
Frame Type	**BP** – By-Pass (CLOSED) **BO** – By-Pass (OPEN) **BT** – By Pass (Triple) **BF** – Bi-fold
Width	Ordered to the 1/16"
Height	Ordered to the 1/16"
	4" top and bottom rail are standard for all heights unless otherwise indicated 2" top and bottom rail are optional under 36" in height and must be requested in notes indicating line numbers
Panel Configuration	Indicate the Panel Configuration · For Bi-fold 2L= 2 panel Bi-Fold · For By-Pass 2L = 2 panels joined
Frame Side	Indicate numerically the number of frame sides (including any Sill) plus shade in the sides required
Ext	If required - Indicate the number of Frame Extensions
Divider Rail Type	**S** = Standard **D** = Deluxe with built in pull handle
Divider Rail	A divider rail is required for support with a varied number of rules · A divider rail is required for other application for heights over 66", a second rail for over 96" · When a divider rail is required the minimum distance between any rail is 20"
Valance Type	**S** – Standard 2 ½" (for Bi-fold) **C** – Crown 5" (for By-Pass)
Valance Returns	**OM** - Return Length (from front of frame to back of frame) BF = 3" BP = 5" BO & BT = 8 3/8" **OV** - Valance comes with returns with requested return length - can be for OM, IM or IF applications **IM** - There are no returns when IM is indicated - Valance is cut at ordered width less 1/8" - Order OV if returns required **IF** - There are no returns when IF is indicated - Valance is cut at ordered width - Order OV if returns required
Override	Must indicate the length of the valance return - measure from front of frame to distance back required Computer will account for the valnce corner miter as well as valance clip projection
Uneven Panel Widths	By-Pass only Provide the panels sizes required · If panels or joined panels are to be different sizes
Frame Cut outs Bi-Fold	All cutouts are 7" - If the cut out required is over 7", the full height or full width of the frame must be cut out · Removing the frames light block & frame back · Side frame cutouts are measured from the bottom IM sill or OM frame to the starting point of the cut out · Top or Bottom cut-outs are measured from the left IM Sill or OM frame to the starting point of the cut out · If the cut out required is over 7", the full height or full width of the frame must be cut out · Surcharges are applicable
Order Acknowledgement	Items that do not meet product specification as detailed in the manual, will be manufactured with a void warranty

Uneven Panel Widths (ByPass Only)						
Line #	Panel 1	Panel 2	Panel 3	Panel 4	Panel 5	Panel 6

J

BI-FOLD
TRACK SYSTEM

Bi-Fold Track System Diagram - Standard Valance

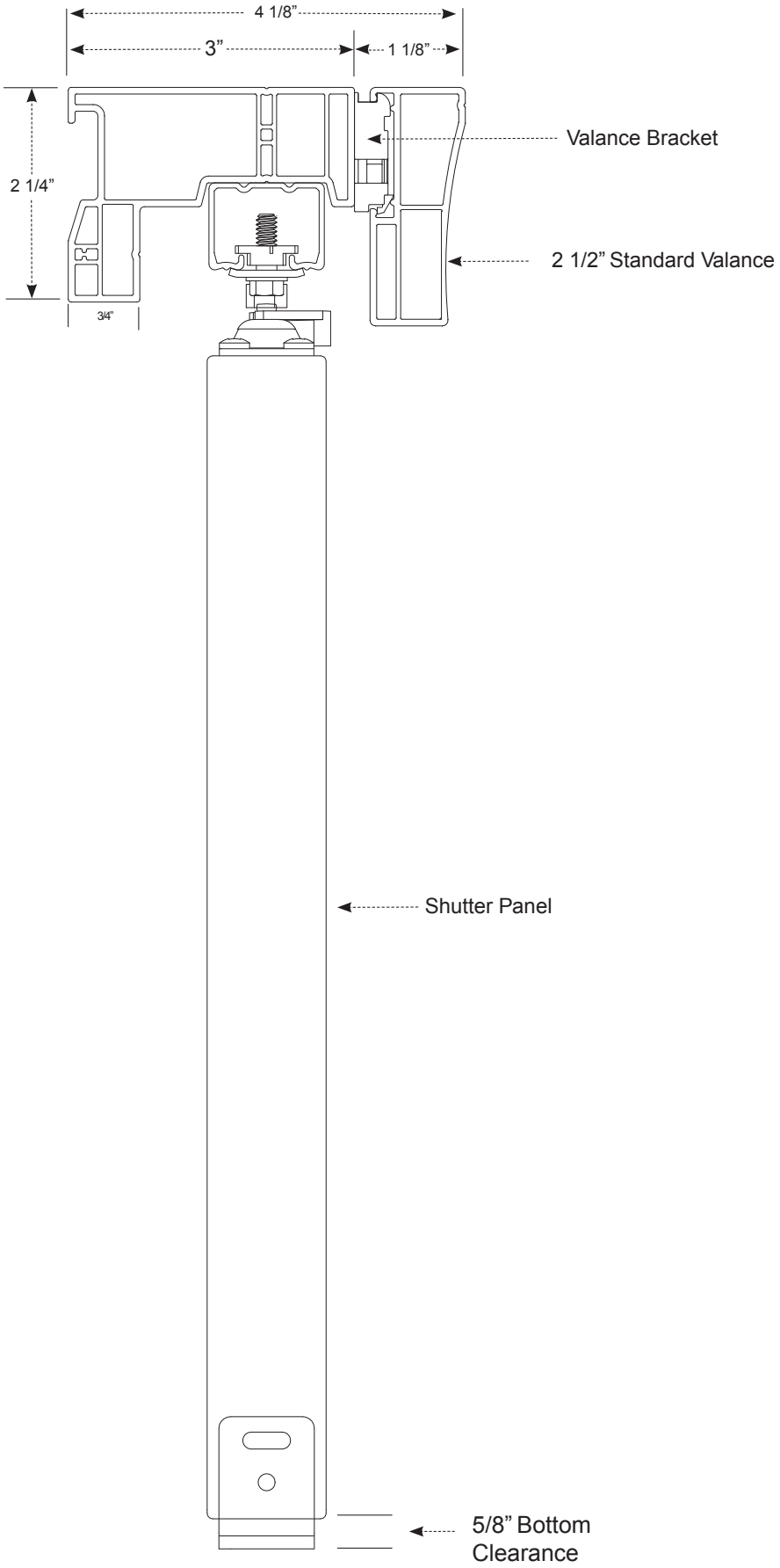

Bi-Fold Track System Diagram - Crown Valance

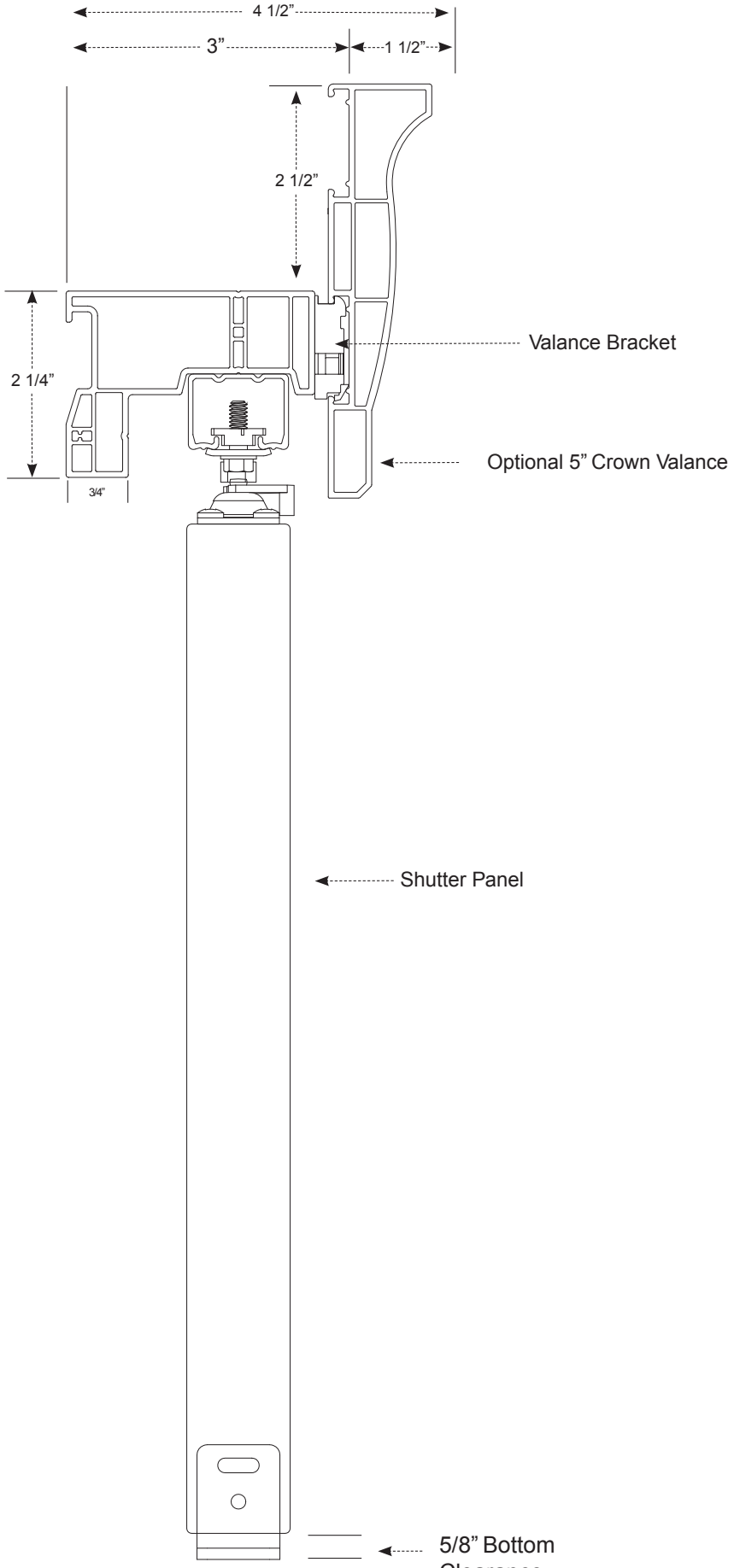

Two Panel Bi-Fold

P2BF-2L

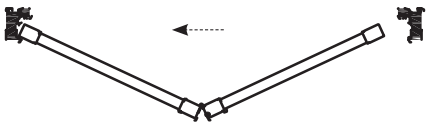

P2BF-2R

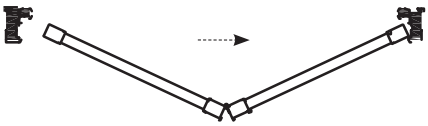

- Minimum Width: 24”
- Maximum Width: 48”
- Minimum Height: 20”
- Maximum Height: 120”

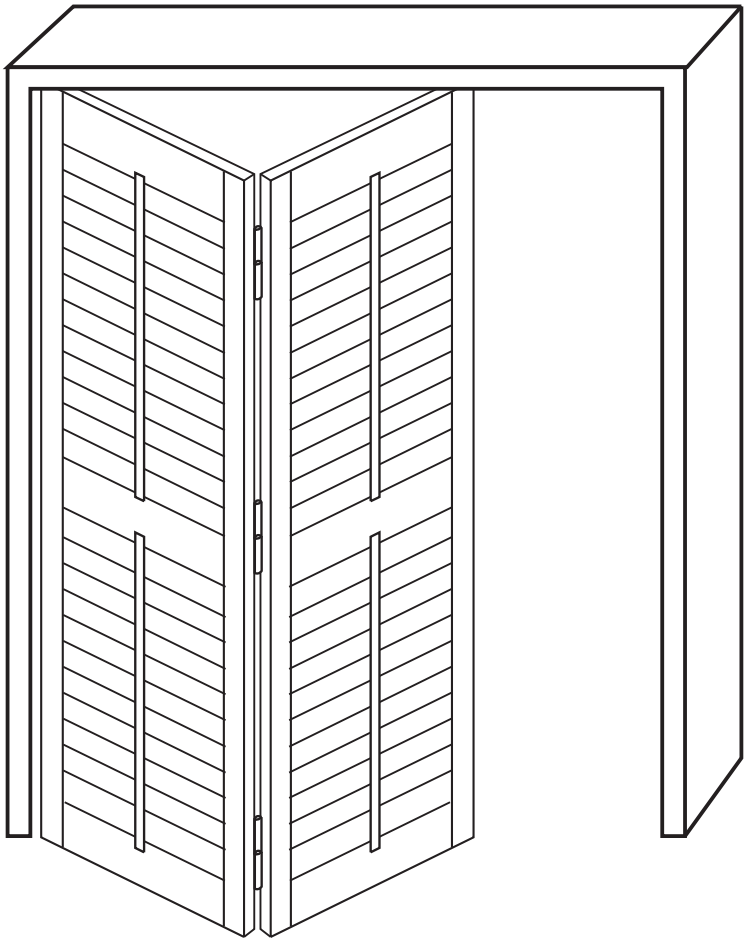

Four Panel Bi-Fold

P4BF-4L

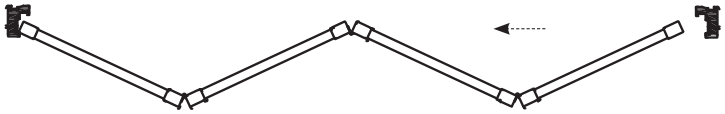

P4BF-4R

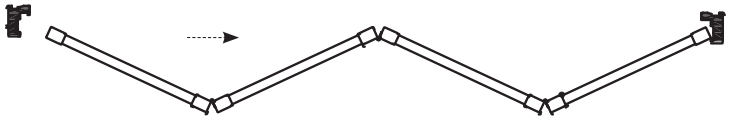

P4BF-2L2R

- Minimum Width: 48”
- Maximum Width: 96”
- Minimum Height: 20”
- Maximum Height: 120”

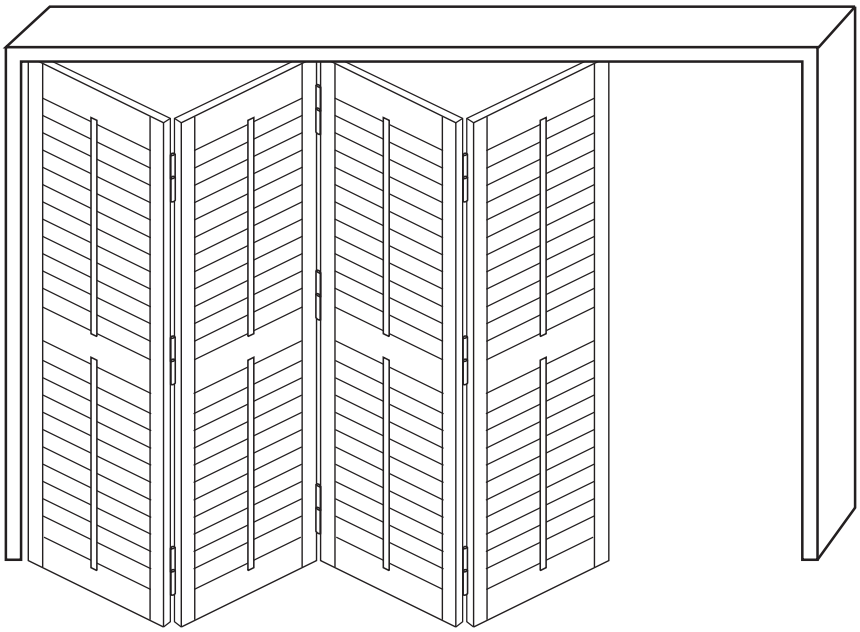

Six Panel Bi-Fold

P6BF-6L

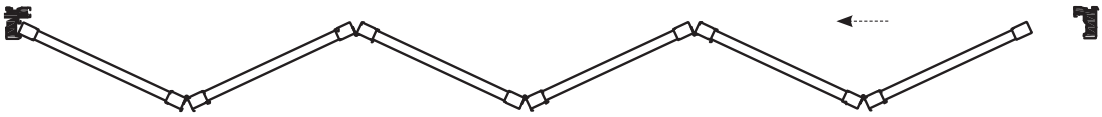

P6BF-6R

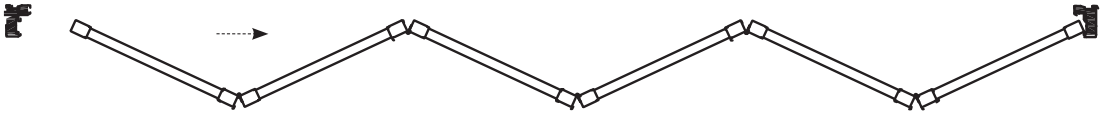

P6BF-4L-2R

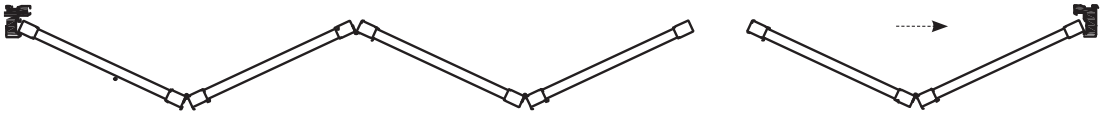

P6BF-2L-4R

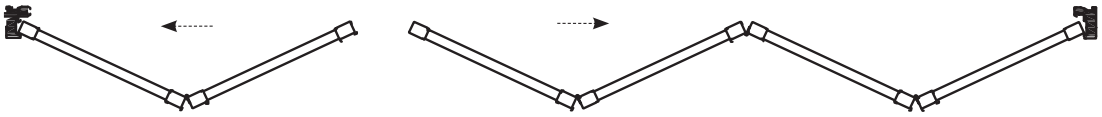

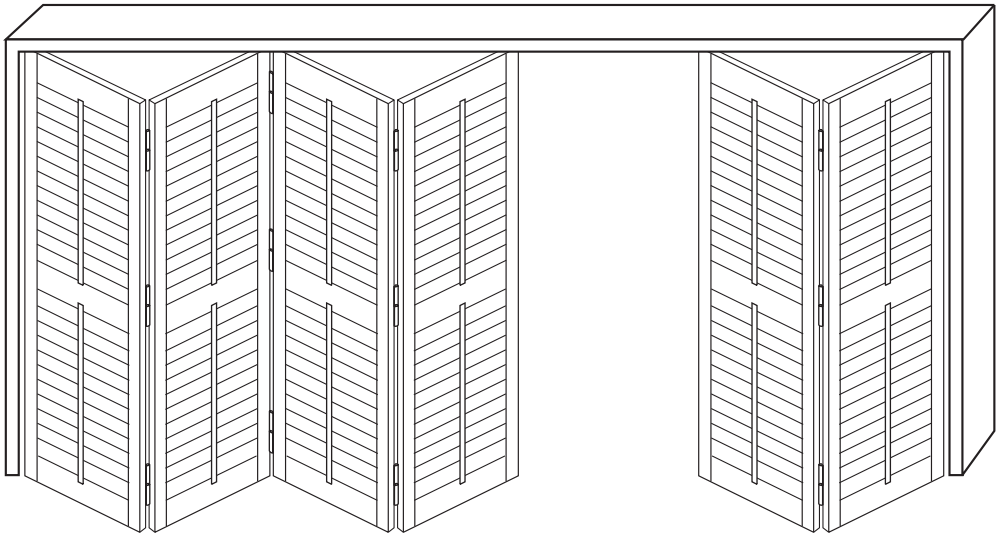

- Minimum Width: 72”
- Maximum Width: 144”
- Minimum Height: 20”
- Maximum Height: 120”

Eight Panel Bi-Fold

P8BF-4L-4R

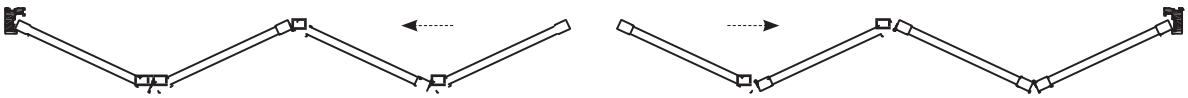

P8BF-6L-2R

P8BF-2L-6R

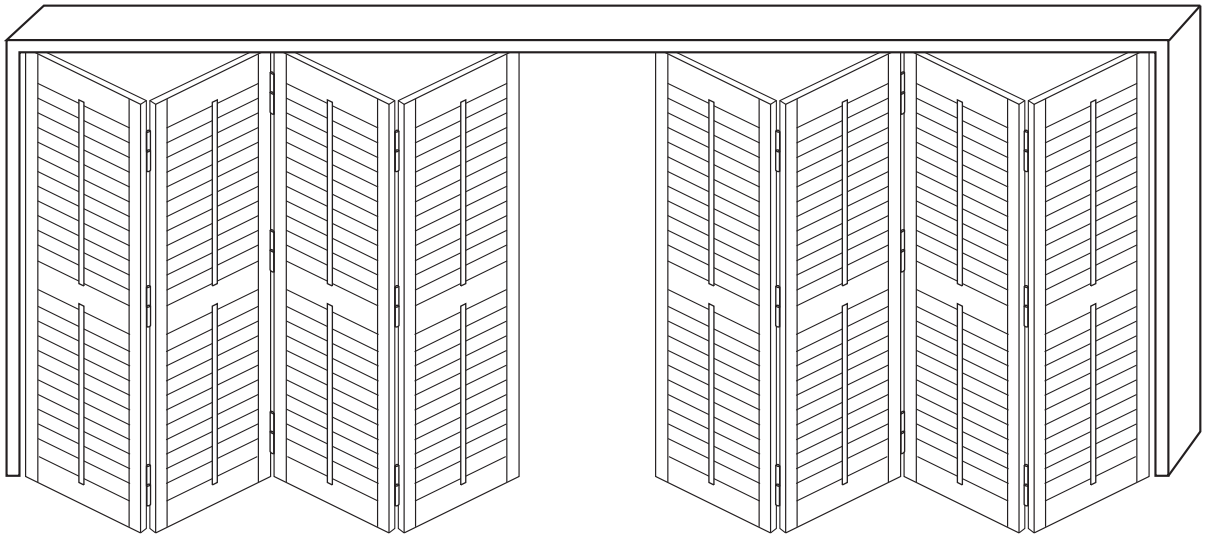

- Minimum Width: 96”
- Maximum Width: 192”
- Minimum Height: 20”
- Maximum Height: 120”

Bi-Fold Clearance

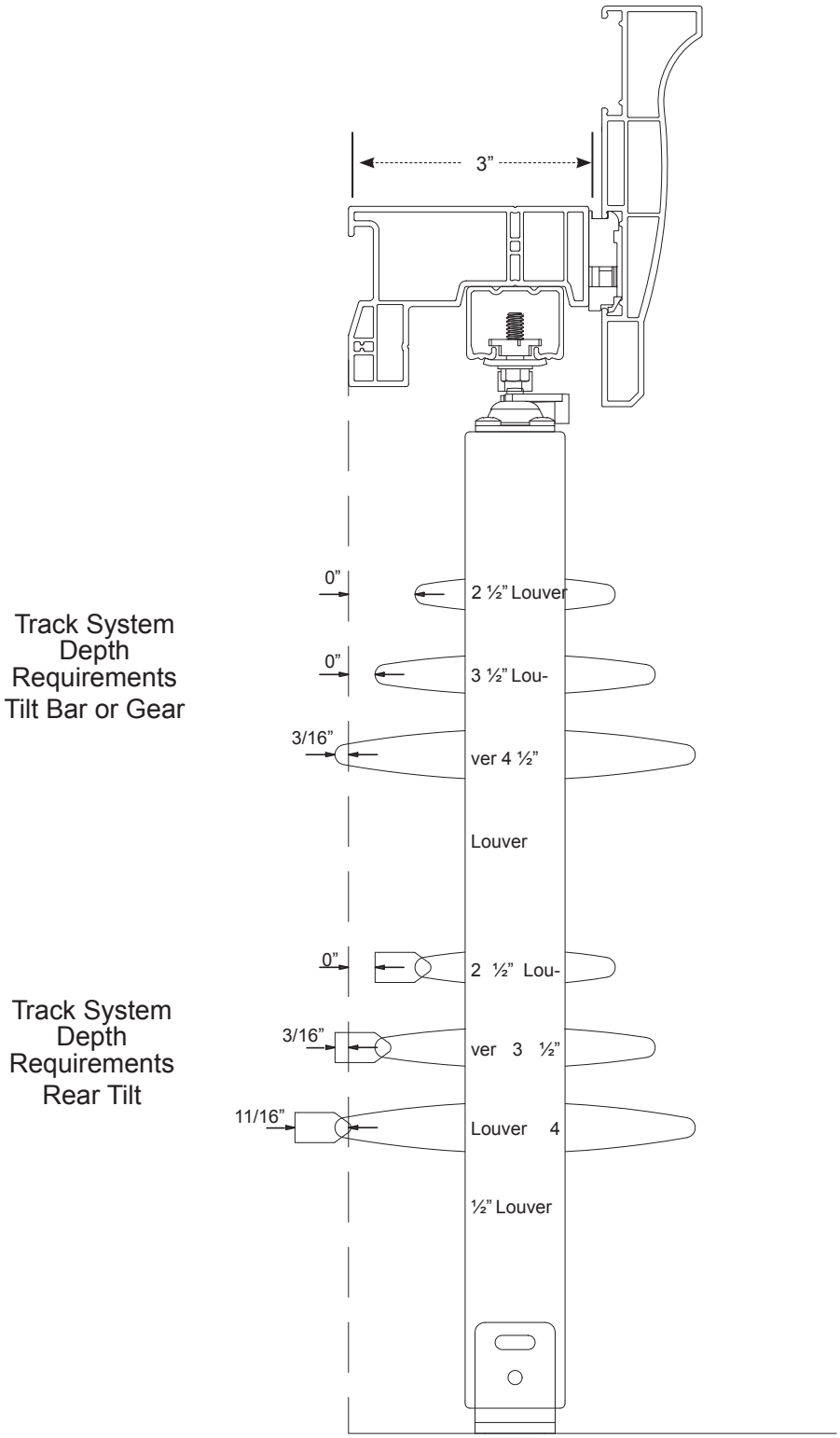

Bi-Fold Measuring Instructions

- Inside mounts must have a depth of 2” minimum.
- Outside mount will project 4 1/2” from wall (includes Crown Valance).

Diagram A

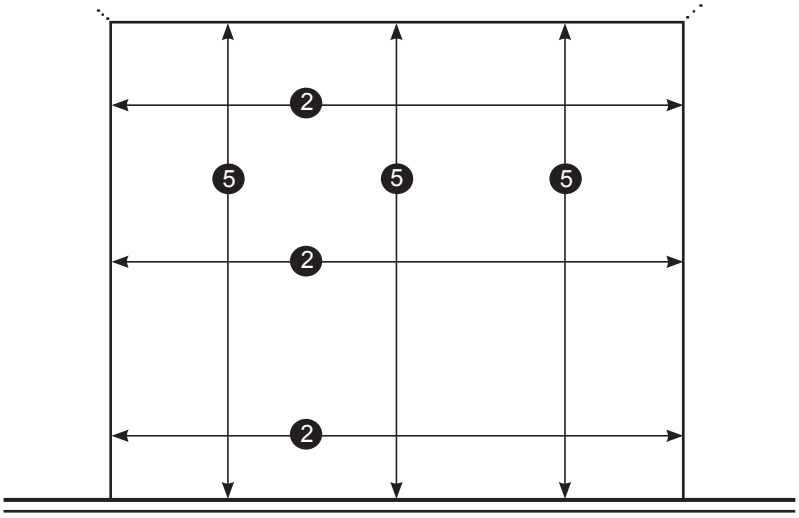

Diagram B

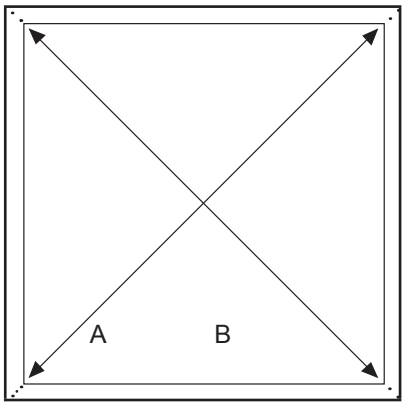

❸ Diagonal squareness check

❶ CHOICE OF FRAME SIDES AND LOUVER
Use the shutter panels to determine proper louver rotation. Check that your chosen louver will overcome any obstruction by placing the frame and panel in front of the obstructions. It is recommended that an inside mount have a minimum jamb depth of 2”. A one sided frame (top) can be ordered for this application, however, a 3 or 4 sided frame is recommended for light gap control. Indicate BF in the frame options section of the Order Form. If additional projection required, request BF extension for outside mount only. Each extension is 3/4”.

❷ CHECK FOR SQUARENESS
Measure on the diagonal (see Diagram B). If the diagonal measurements are not identical, an inside mount is not recommended. An alternative way to check for a perfectly square window, simply place your panel in each of the four corners. If you find the panels are not flush in all corners, the window opening is not square.

❸ MEASURE INSIDE WIDTH
Measure in three places (top, middle, bottom) and record the smallest measurement onto an Order Form if the application is for an inside mount. For an outside mount, a minimum of 2 3/8” is required to be added to each side where a frame is required, or measure from outside edge of trim to outside edge of trim.

❹ MEASURE INSIDE HEIGHT
Measure in three places (left, middle, right) and record the smallest measurement onto an Order Form if the application is for an inside mount. For an outside mount, a minimum of 2 3/8” is required to be added to the top and/or bottom that a frame is required, or measure from outside edge of trim.

ONLY IF A DIVIDER RAIL IS REQUESTED
The measurement recorded is determined from the bottom sill to the middle of where the divider rail is to be located. One divider rail is required for panels over 66” with a maximum 66” between the middle of the divider rail and either top or bottom rail.

❺ Two divider rails are required for panels over 96” in height with a maximum 66” between any two rails.

❻ CHOICE OF PANEL CONFIGURATION
Determine from pages J3-7, and complete the Order Form. Sill Frames and Double Hung are not applicable.

❼ ORDER VALANCE
Choose between the 2 1/2” Standard Valance or 5” Crown Valance and select the appropriate valance returns on the track system order form. See page K5-7.

Note: 5” Crown Valance will not work if used on a flush inside mount bi-fold system. Ordered as OM valance return standard length will end at the back of the frame. If OM valance return is requested to be other than standard, then measure the length from the front of the frame to the requested end point. Enter the distance under OV on the order form. If IM, note that there is no valance return.

Bi-Fold Installation Instructions

1. **FRAME ASSEMBLY (for 3 or 4 sided applications)**
   Set the provided 3" screws into the assembly holes in the top frame. Align the screws with the screw ports inside the side frames (fasten tightly).
2. **FRAME SPACERS**
   Spacers are glued or placed at the ends of any top frame in which side frames are present. The spacers are located in the panel/track recesses of the top frame. The assembly screws will pass through the spacer and into the side frames.
3. **INSTALLATION HOLES**
   Once the frames are assembled, installation holes are required by using a 3/8" drill bit (if not pre-drilled).
   A) For an inside mount, drill a 3/8" hole through the first layer of Polyresin 3, within the mounting area every 10" starting at each end of the frame.
   B) For an outside mount, drill a 3/8" hole through the layer of Polyresin 3 at the front edge of the reveal of the frame every 10".
4. **FRAME INSTALLATION**
   A) For an inside mount, fasten the top frame to the opening, making sure it is level; shim to level if necessary. Plumb the side frames and fasten with screws provided.
   B) For an outside mount, set the frame against the wall. Level the top and fasten the top frame to the wall with the provided installation screws.
5. **INSERT AND ATTACH TRACK COMPONENTS**
   A) One Way Stacking Bi-Folds
   Determine pivot or stacking side. Install Top Pivot at that end of the track. Tighten to the point it will not fall out of the track. Insert all the carriers. Insert snugger with the bumper towards the center of the track. Tighten to the point it will not fall out of the track.
   B) Center Close
   Install Top Pivot at the left end of the track. Tighten to the point it will not fall out of the track. Insert half of the carriers, then insert two snuggers back to back. Tighten to the point it will not fall out of the track. Insert the remaining carriers and the Top Pivot at the right end of the track and tighten to the point it will not fall out of the track.
6. **ALUMINUM TRACK**
   Mount the track with all components installed by placing the track in the recessed channel of the frame and attach provided installation screws. For inside mounts, leave out every other track screw. Installation screws will be set through the track, through the frame and into the opening.
7. **MOUNT BOTTOM PIVOT(S)**
   Mount on the side frame or the window jamb, tight to the in line with indicator line on same side as top pivot. One way close will include one bottom pivot and center close will include two pivots.
8. **HANG PIVOTING PANELS**
   First, insert the bottom pin into the bottom pivot bracket. Push the top door plate onto the adjustable nut of the top pivot. To plumb the panels, loosen the set nut on the top pivot. Move the panel until plumb then tighten set nut. The bottom pivot is also adjustable as needed.
9. **HANG REMAINING PANELS**
   Hang panels from the pivoting panels and push remaining top door plates onto the adjustable nut of the wheel carriers. Lock the panels in place by rotating the plastic slide around the neck of each adjustable nut. Insert all hinge pins. Adjust the wheel carriers to level by using the enclosed wrench.
10. **SNUGGERS**
    The snuggers are used to provide tension on Bi-Folding panels, so that the panels remain in position when closed. Once the panels are fully installed, loosen the set screw of the snugger and position so that the wheel carrier will slightly press against the rubber bumper. One snugger is used at the stacking end for a one way Bi-Fold. Two snuggers with the rubber facing the carriers are positioned in the centre for Bi-Folds butting together.
11. **ATTACH VALANCE**
    Attach valance brackets to the front of the frame using the included #8 x 1" screws, the installation holes should be pre-drilled. Once all brackets are secure, position the channel on the back of the valance so that it rests on the bracket. The valance will need to be on a 45° angle, with the bottom of the valance farther into the room. Rotate the valance down to a vertical orientation until locked into all brackets.

Diagram C - Frame Assembly

1. Insert the provided 3" screws though the top frame
2. Line up the screw through the screw ports inside the side frames (fasten tightly)

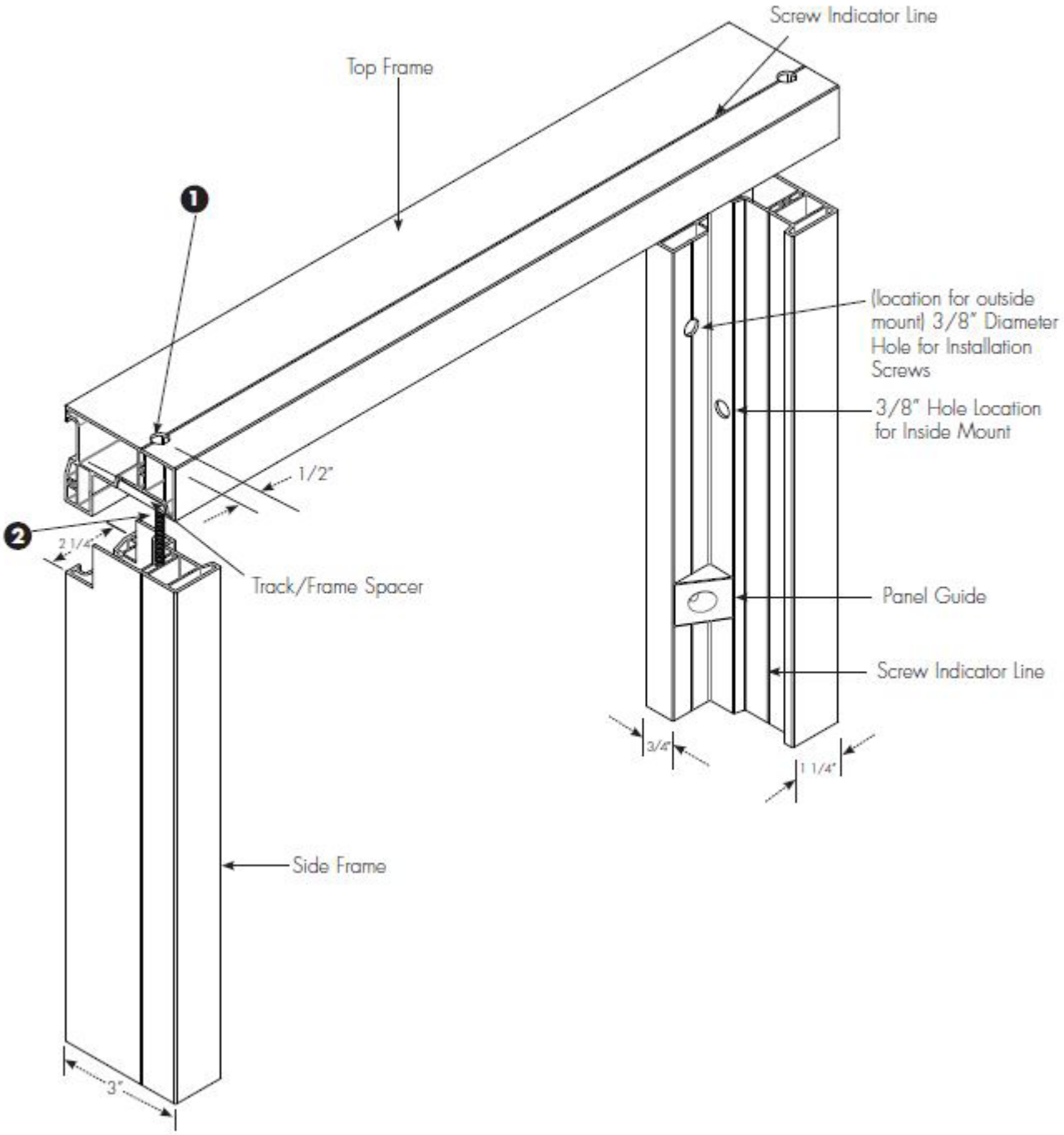

Diagram D

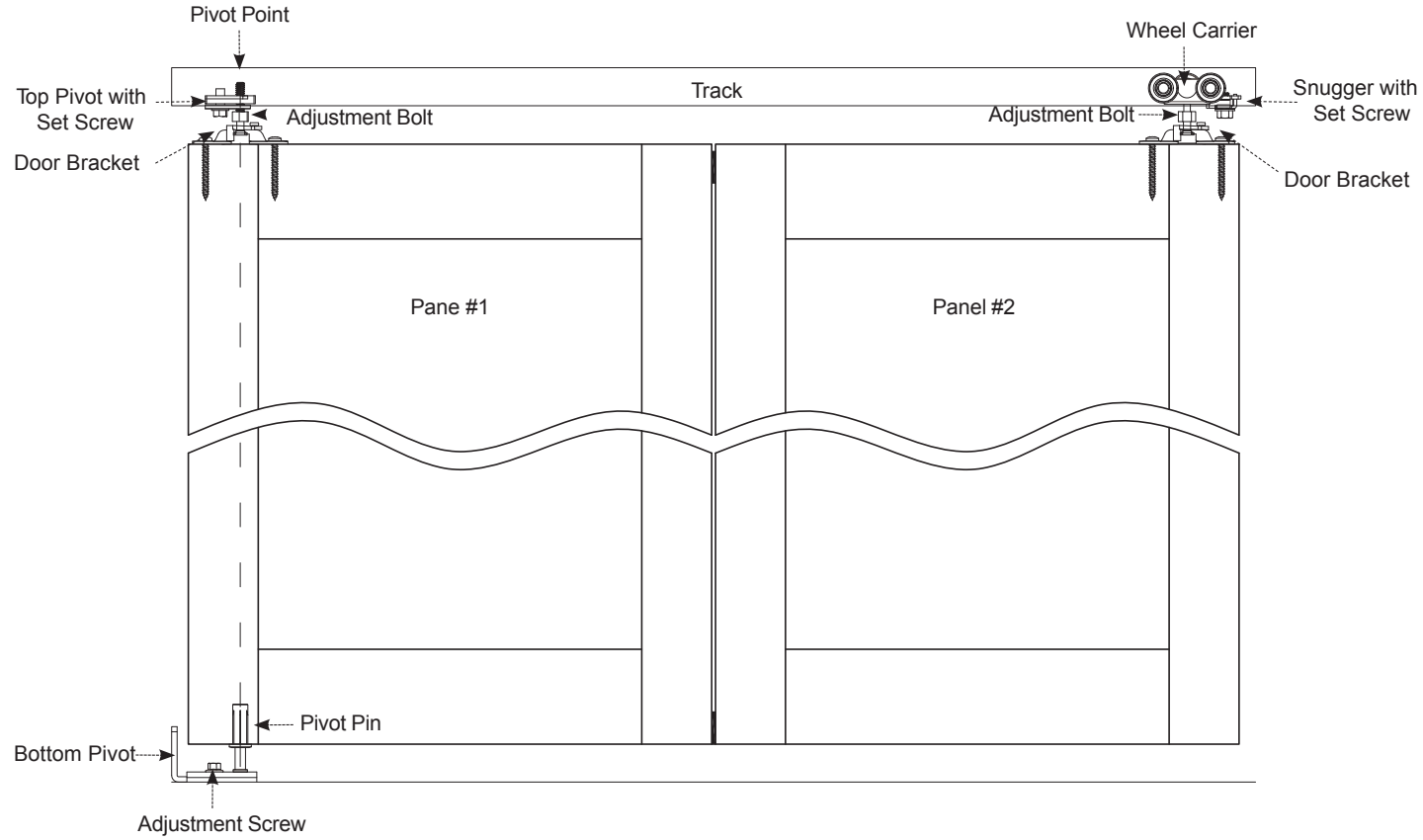
Pivot Point
Wheel Carrier
Top Pivot with Set Screw
Track
Snugger with Set Screw
Adjustment Bolt
Adjustment Bolt
Door Bracket
Door Bracket
Pane #1
Panel #2
Pivot Pin
Bottom Pivot
Adjustment Screw

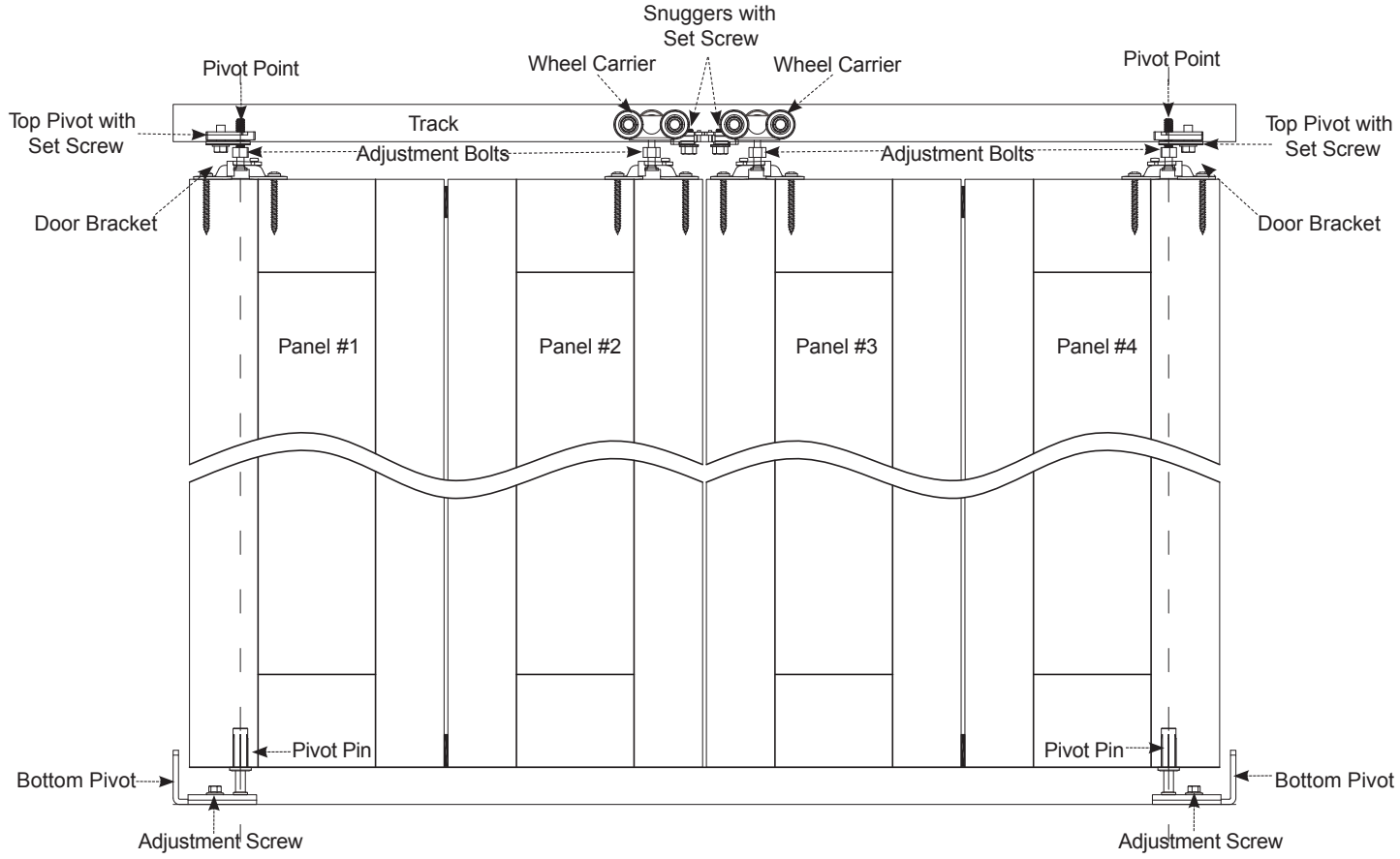
Snuggers with Set Screw
Pivot Point
Wheel Carrier
Wheel Carrier
Pivot Point
Top Pivot with Set Screw
Track
Top Pivot with Set Screw
Adjustment Bolts
Adjustment Bolts
Door Bracket
Door Bracket
Panel #1
Panel #2
Panel #3
Panel #4
Pivot Pin
Pivot Pin
Bottom Pivot
Bottom Pivot
Adjustment Screw
Adjustment Screw

Diagram E - Inside Mount

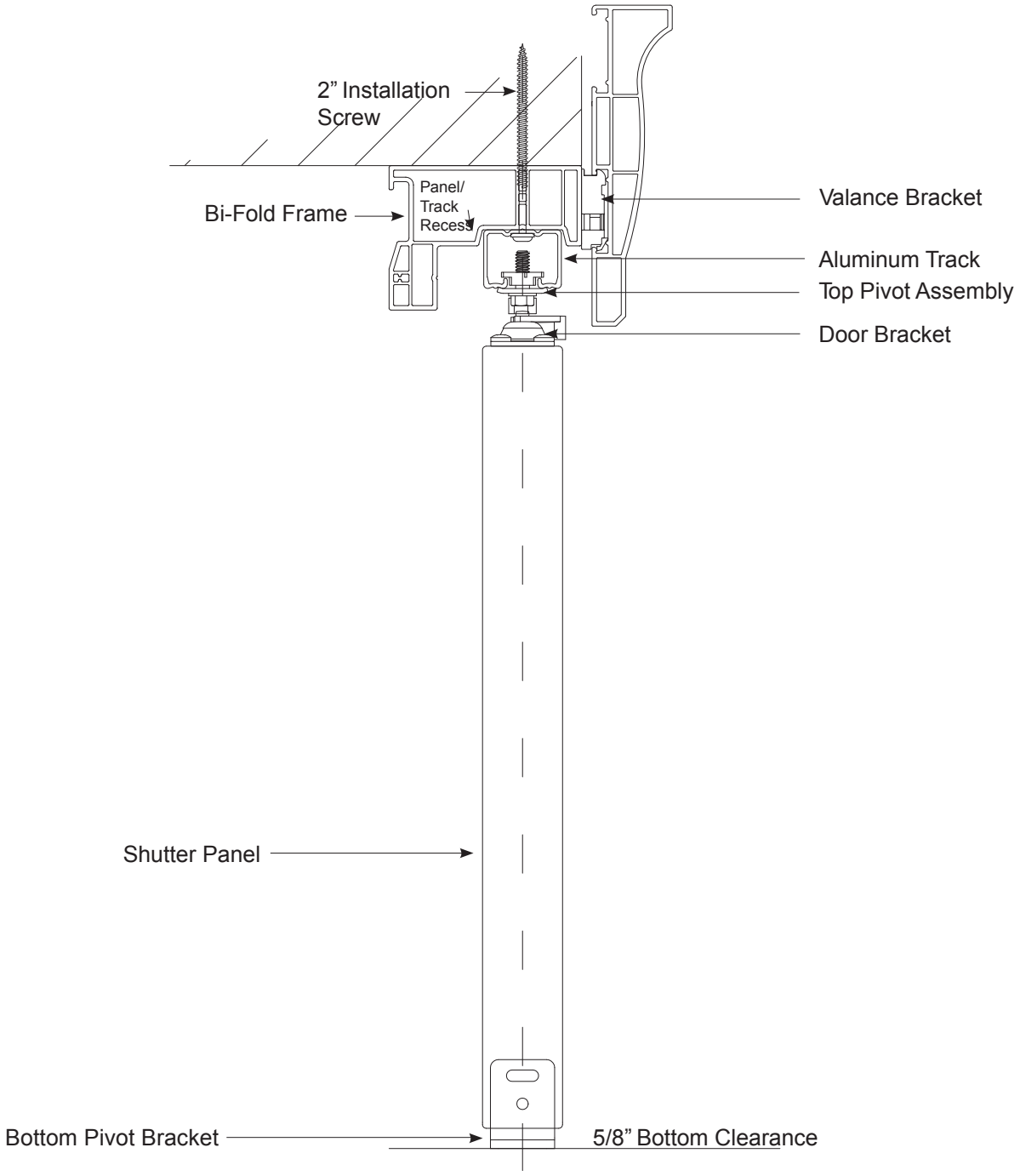

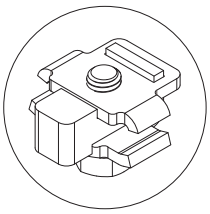
Snugger

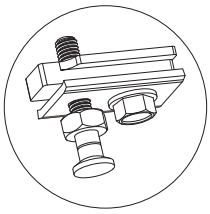
Top Pivot

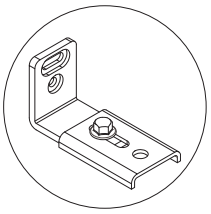
Bottom Pivot

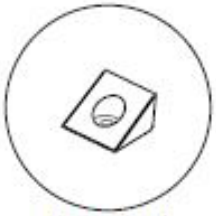
Panel Guide

Diagram F - Outside Mount

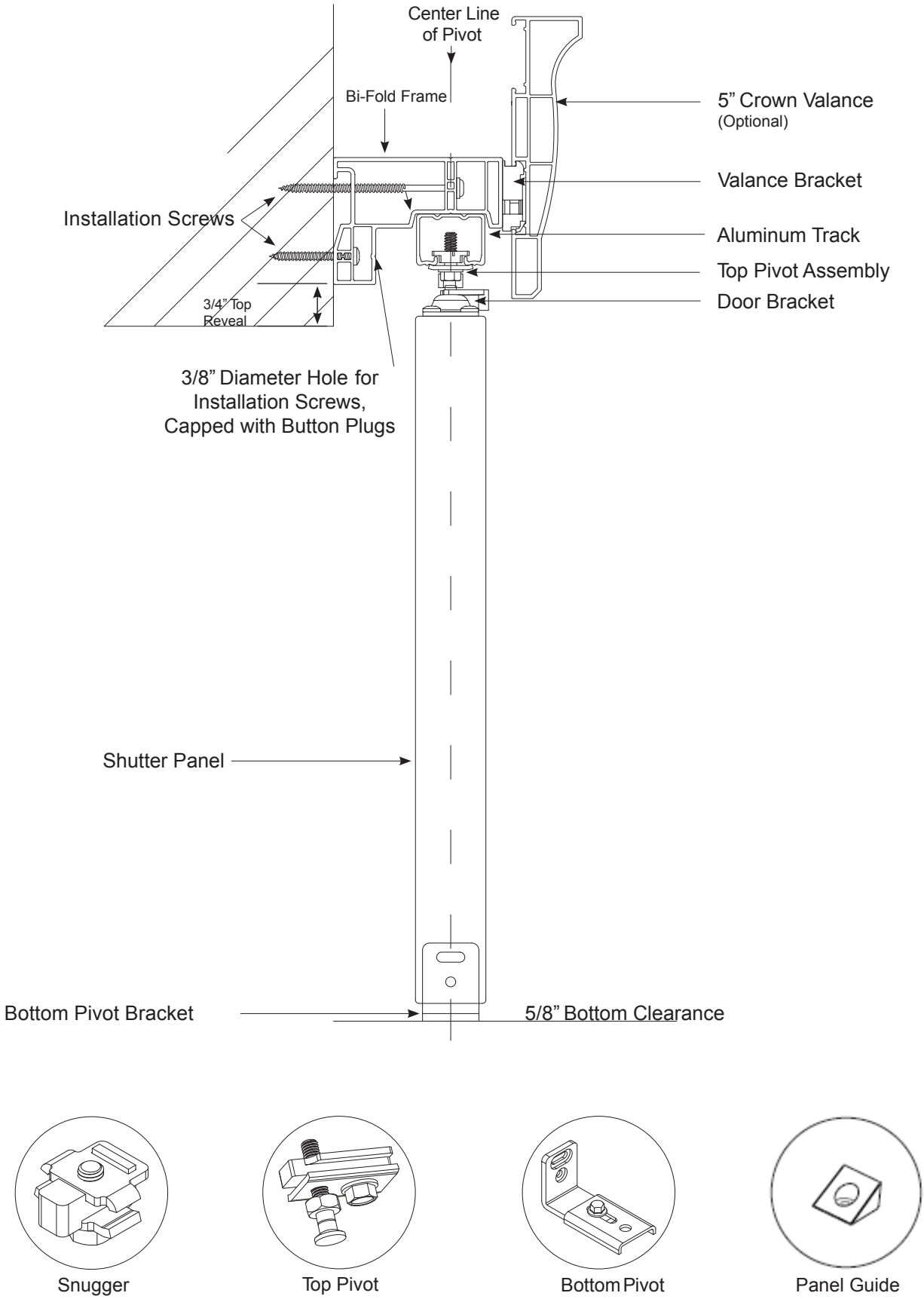

Diagram G - Frame Extension

Bi-Fold with Extension
Bi-Fold Frame Extension increases the projection of the frame by 3/4”.

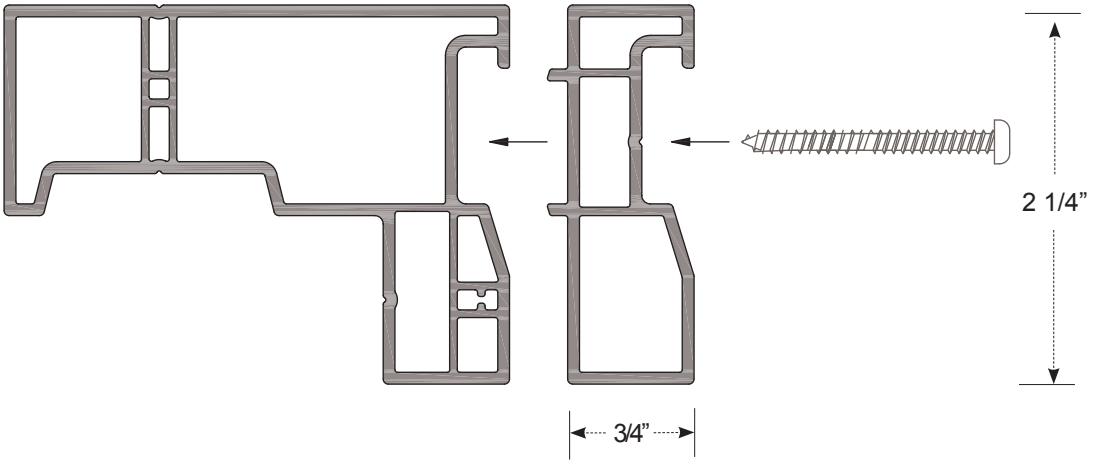

Orient the extension so that it mates with the back of the frame.
Use an installation screw to attach the extension to the frame.

Track System Order Form Instructions

* Line	* Room Location	* Control System	* Split Option	* Colors	Hinges B-Fold ONLY	* Louver Size	* Mount Type	* Frame Type	Width Ordered to 1/16"	Height Ordered to 1/16"	Panel Configuration	Frame Sides	Frame Ext.	Divider Rail			Valance		
														Type	#1	#2	Valance Type	Returns	Override
		G TC TOF	Distance Up Inches to Center Split	5136 5140 5151	P S B	2-1/2" 3-1/2" 4-1/2"	IM OM IF	BP ByPass (closed) BO ByPass (open) BT (Bypass) (Triple)	Max single panel 36" Max bi-fold panel 24" Min panel width 17" Inside Mount = Smallest Opening Size Outside Mount =Largest Frame Size	Max. Panel 120"	LR LCR LCCR	BYPASS 1 3 4	0 1 2	Standard (S) Deluxe (D)	Distance up required over 66"	Distance Up required over 96"	Standard (S) Crown (C)	OM OV Override	Indicate with Custom Returns

Line	Indicate line number start from #1 for ease of referring to a confirmation or sales quotation
Room	Indicate the room name keeping under 12 characters to allow for full name to show on the product labels · Indicate each room different for ease of sorting - (example Bed 1 Left, Bed 1 Center, Bed 1 Right)
Operating System	**G = Gear (Internal Gear System)** **TC= Tilt Bar Front Center (a function bar used to tilt louvers with option for Center Front)** **TOF= Tilt Bar Front Offset Hinge Side (a function bar used to tilt louvers with option for Offset Front)**
Split Option	Indicate the distance up from bottom of measurements to the center of the desired split location or specify louver count on top & bottom · Split may not be exact as requested. It will vary based on louver size · Split can be requested on any of the three operating systems at time of production · Splits should not be modified at installation as additional tension may be required
Colors	**· White / Cotton 5136 · Almond / Vanilla 5140 · Ivory / Pearl 5151**
Hinge Color	**P = Painted S = Stainless Steel B= Brass**
Louver Size	**2 ½" 3 ½" 4 ½"**
Mount Type	**OM** - Outside Mount - Factory takes no deductions - OM Installation holes are predrilled
	IM - Inside Mount - Factory takes 1/8" deductions on both width and height - IM Installation holes are predrilled · DirectConnect indicates terminology as "inside tight"
	IF – Inside Finished - Factory takes no deduction per frame side - IM Installation holes are predrilled
Frame Type	**BP** – By-Pass (CLOSED) **BO** – By-Pass (OPEN) **BT** – By Pass (Triple) **BF** – Bi-fold
Width	Ordered to the 1/16"
Height	Ordered to the 1/16"
	4" top and bottom rail are standard for all heights unless otherwise indicated 2" top and bottom rail are optional under 36" in height and must be requested in notes indicating line numbers
Panel Configuration	Indicate the Panel Configuration · For Bi-fold 2L= 2 panel Bi-Fold · For By-Pass 2L = 2 panels joined
Frame Side	Indicate numerically the number of frame sides (including any Sill) plus shade in the sides required
Ext	If required - Indicate the number of Frame Extensions
Divider Rail Type	**S** = Standard **D** = Deluxe with built in pull handle
Divider Rail	A divider rail is required for support with a varied number of rules · A divider rail is required for other application for heights over 66", a second rail for over 96" · When a divider rail is required the minimum distance between any rail is 20"
Valance Type	**S** – Standard 2 ½" (for Bi-fold) **C** – Crown 5" (for By-Pass)
Valance Returns	**OM** - Return Length (from front of frame to back of frame) BF = 3" BP = 5" BO & BT = 8 3/8" **OV** - Valance comes with returns with requested return length - can be for OM, IM or IF applications **IM** - There are no returns when IM is indicated - Valance is cut at ordered width less 1/8" - Order OV if returns required **IF** - There are no returns when IF is indicated - Valance is cut at ordered width - Order OV if returns required
Override	Must indicate the length of the valance return - measure from front of frame to distance back required Computer will account for the valnce corner miter as well as valance clip projection
Uneven Panel Widths	By-Pass only Provide the panels sizes required · If panels or joined panels are to be different sizes
Frame Cut outs Bi-Fold	All cutouts are 7" - If the cut out required is over 7", the full height or full width of the frame must be cut out · Removing the frames light block & frame back · Side frame cutouts are measured from the bottom IM sill or OM frame to the starting point of the cut out · Top or Bottom cut-outs are measured from the left IM Sill or OM frame to the starting point of the cut out · If the cut out required is over 7", the full height or full width of the frame must be cut out · Surcharges are applicable
Order Acknowledgement	Items that do not meet product specification as detailed in the manual, will be manufactured with a void warranty

Uneven Panel Widths (ByPass Only)						
Line #	Panel 1	Panel 2	Panel 3	Panel 4	Panel 5	Panel 6

K

TRACK SYSTEM VALANCES

Valance Diagram

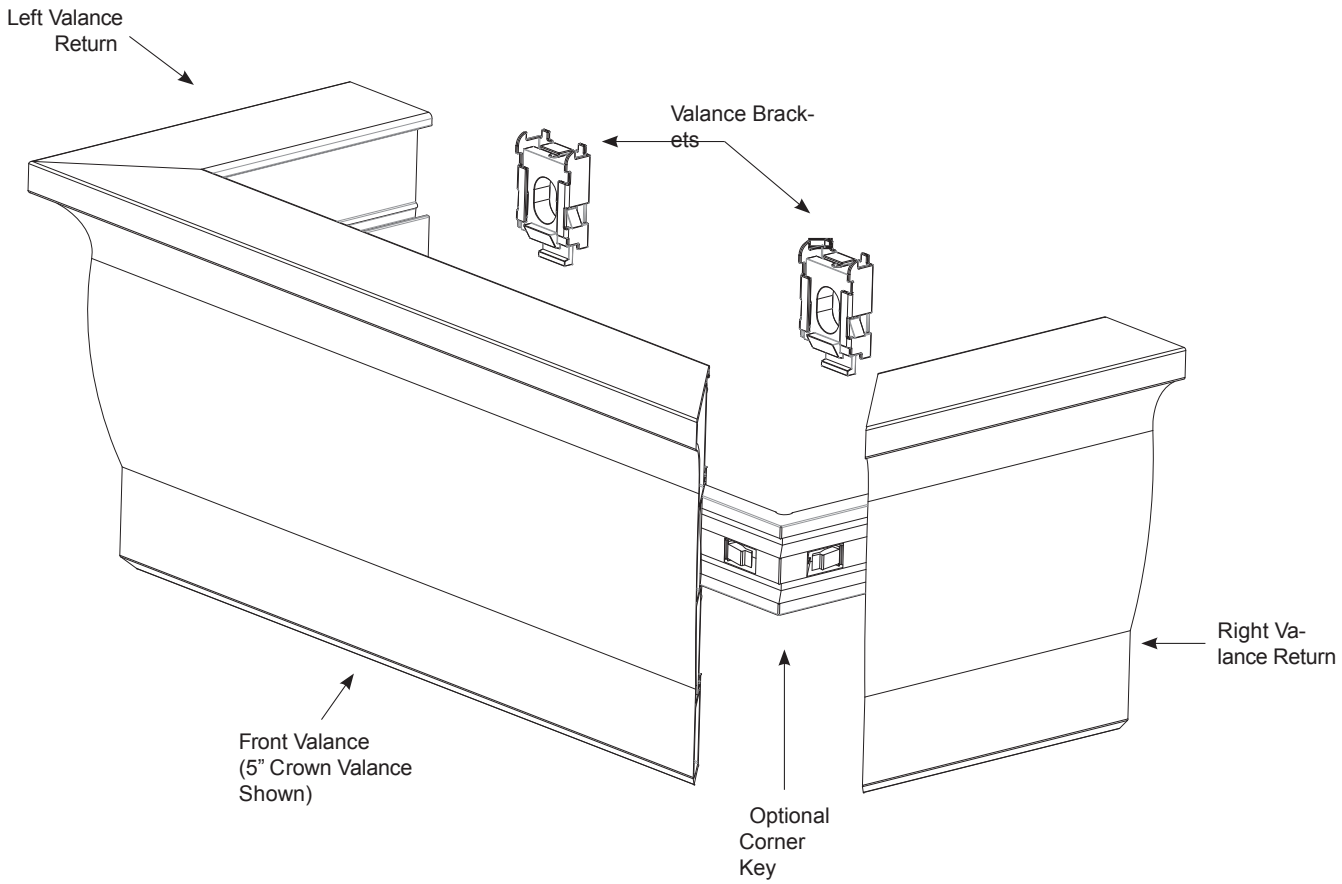

FEATURES AND BENEFITS

1. Three valance options available:
   - 5" Crown Valance
   - By-pass Valance (3 1/2")
   - Bi-Fold Valance (2 1/2")
2. Corner keys can be used to assist in the assembly of valance returns.
3. Valance brackets used to attached valance assembly to frame.

VALANCE RETURN OPTIONS

1. Square cut no returns.
2. Standard valance return extends to back of frame.
3. Custom valance return (provide amount to be deducted from standard valance return length). See pages K5-7 for additional details and dimensions.

Valance Options

5” Crown Valance

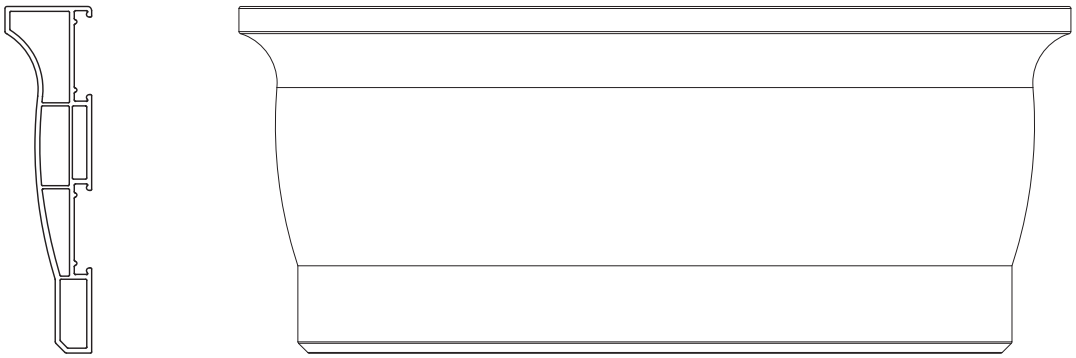

Optional for all track systems

3 1/2” Standard Valance

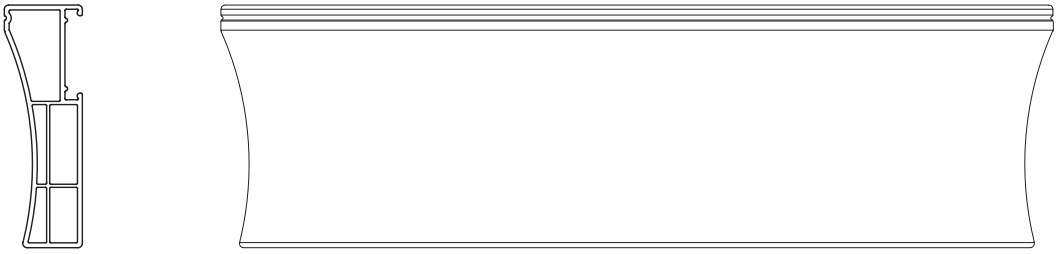

Standard for all by-pass track systems

2 1/2” Standard Valance

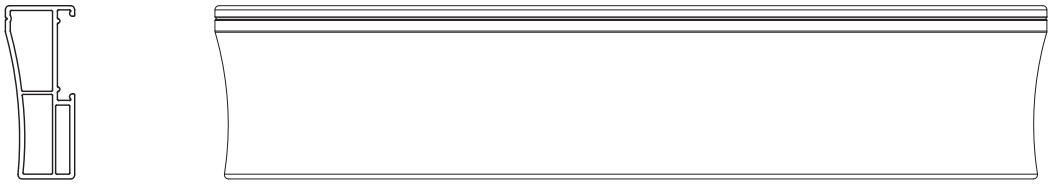

Standard for all bi-fold track systems

Valance Installation

1. Attach valance brackets to the front of the frame using the included #8 x 1” bypass screws, the installation holes should be pre-drilled. Brackets should be 6” from each end of the frame and spaced no more than 18” apart.

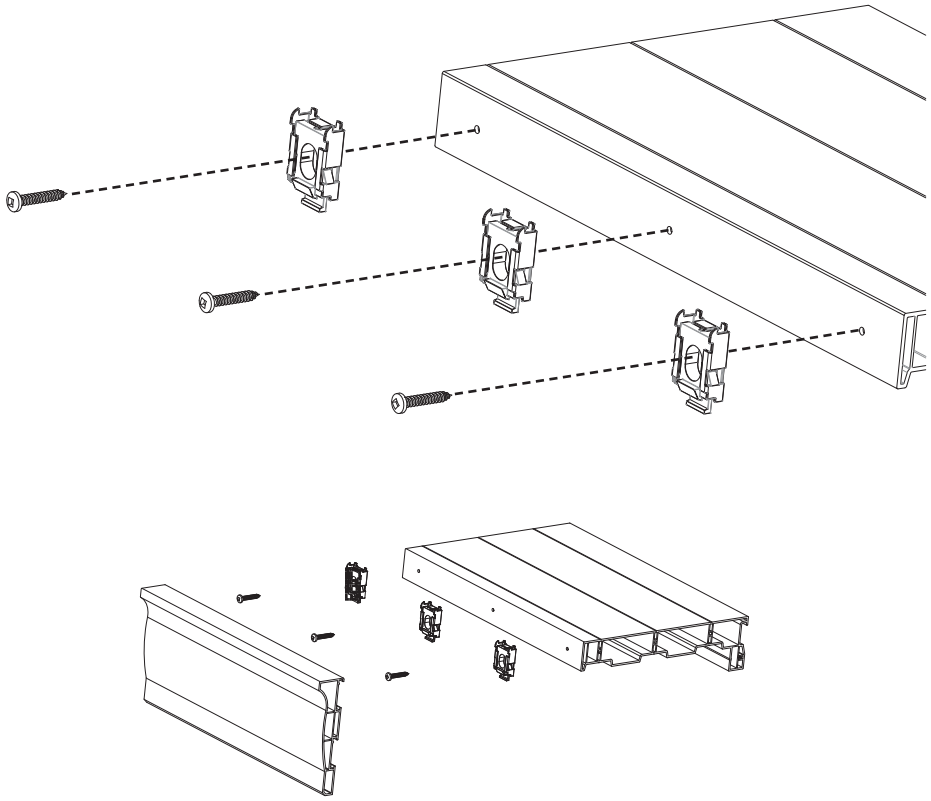

2. Once all brackets are secure, position the channel on the back of the valance so that it rests on the bracket. The valance will need to be on a 45 degree angle (the bottom of the valance farther into the room).

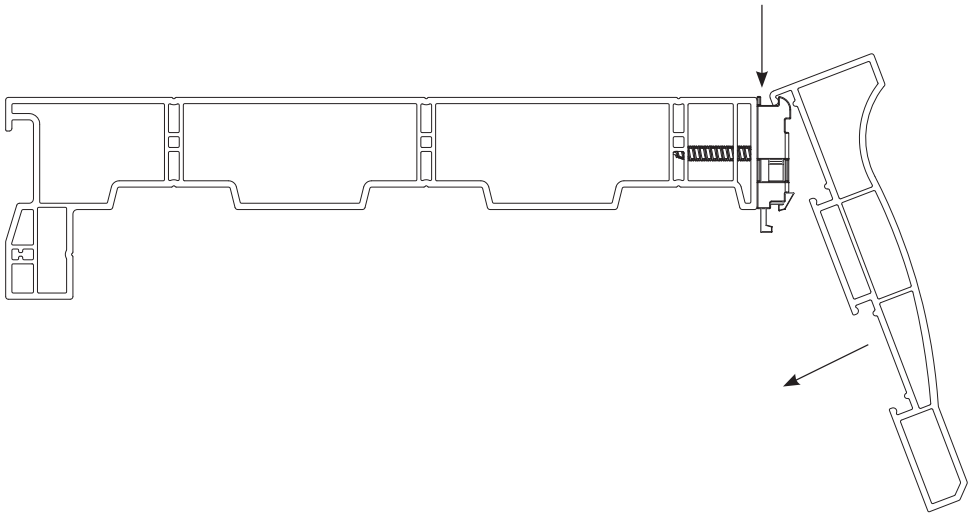

Valance Installation

3. Rotate the bottom of the valance down and back to a vertical orientation until locked into all brackets. If the valance and return tilt, then use a hinge shim on the valance clip to level..

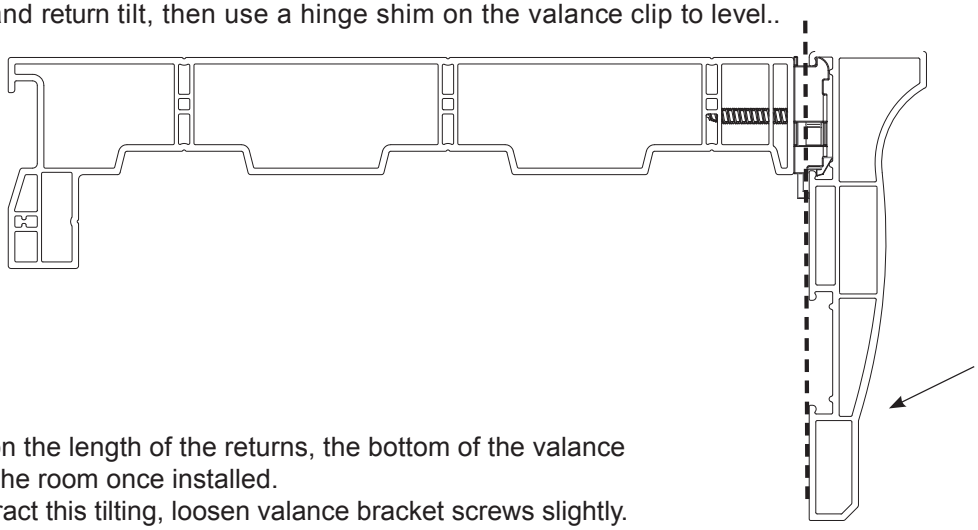

Depending on the length of the returns, the bottom of the valance may tilt into the room once installed.
a) To counteract this tilting, loosen valance bracket screws slightly.
b) Place a hinge shim behind the top of bracket and tighten screw.
c) Repeat for each valance bracket.

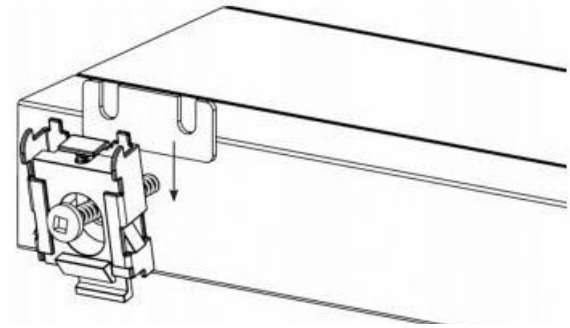

4. To remove the valance, use a flat head screwdriver or similar, push up on the plastic tab located at the bottom of the valance bracket. Repeat this for each bracket while holding the valance. Once all brackets are released, rotate the valance up and out to remove.

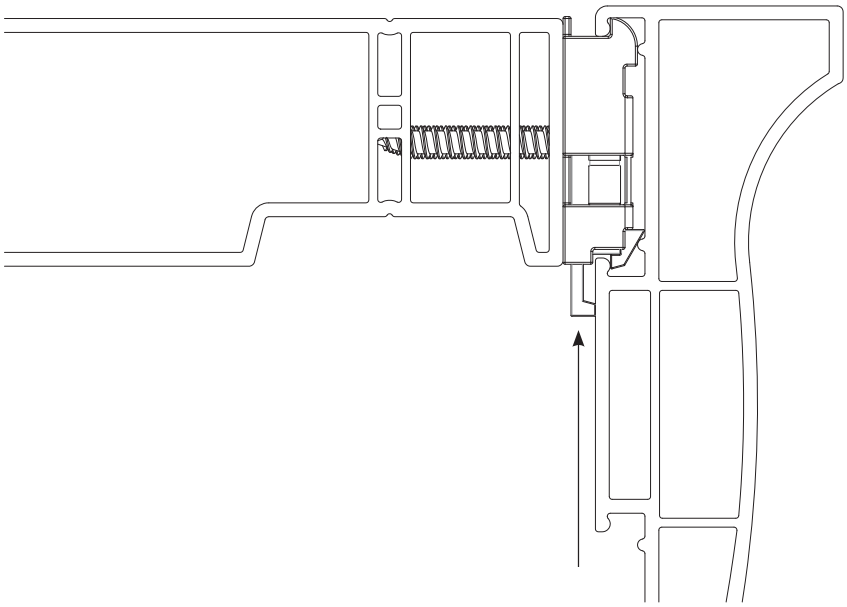

Inside Mount
Fully recessed frame - square cut valance

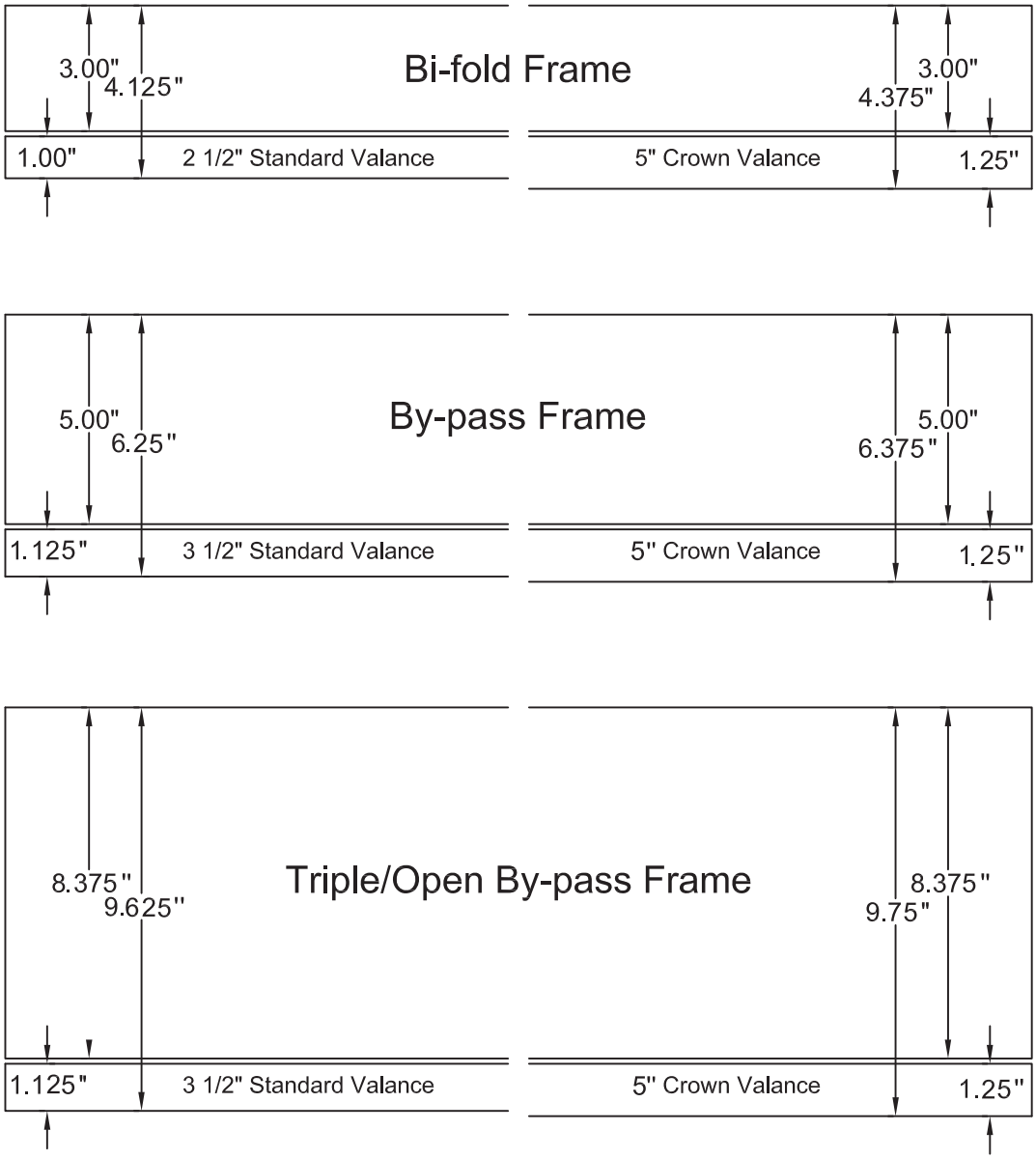

Outside Mount
Standard full length valance returns

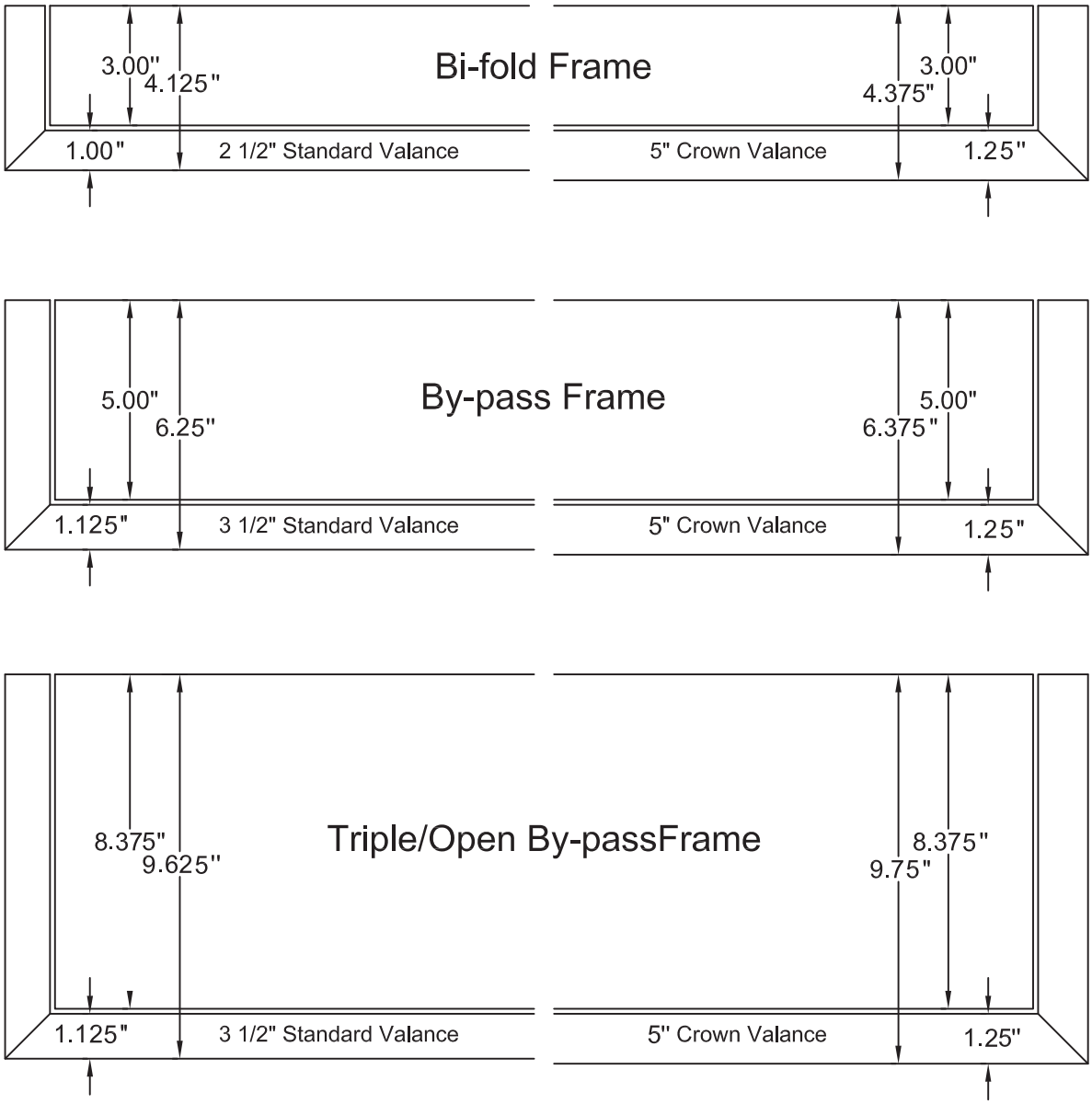

Custom Returns
Optional for IM or OM Track Systems

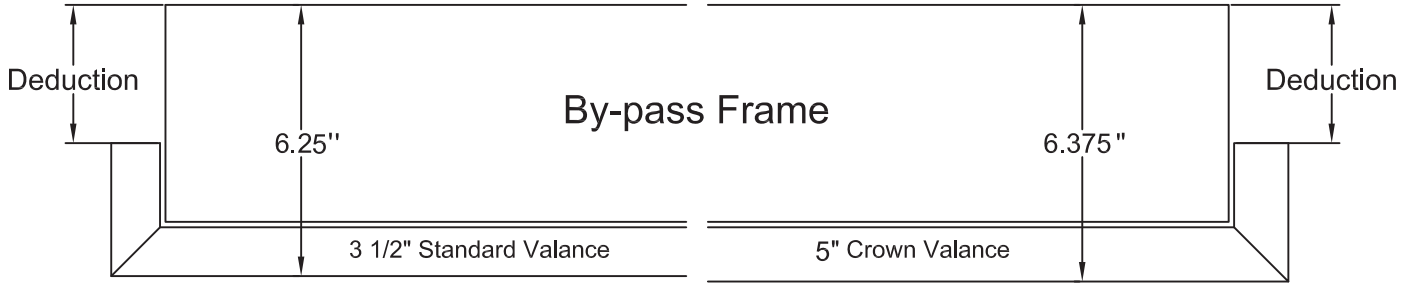

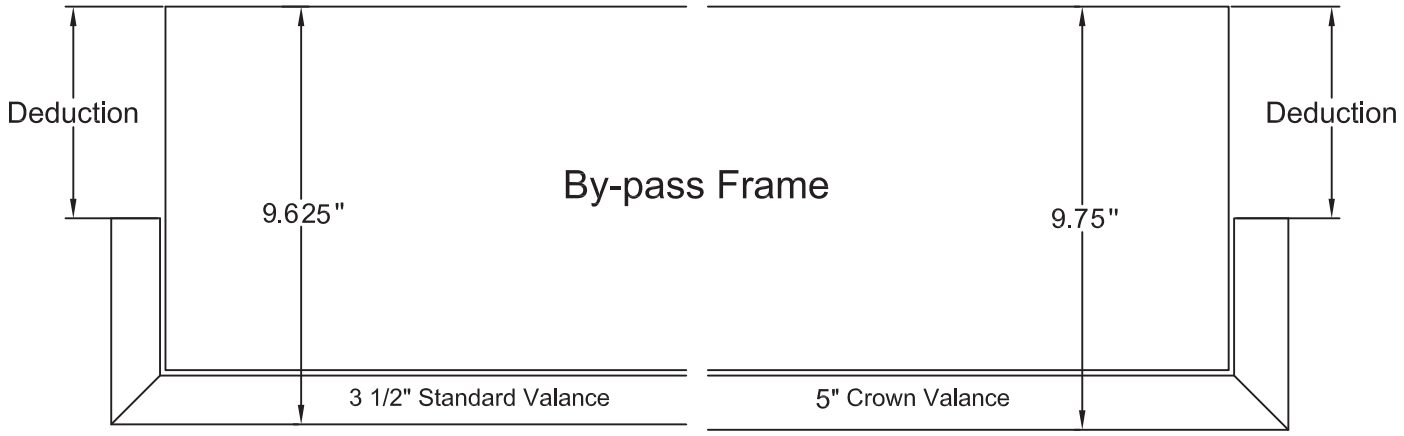

Note the amount to deduct for custom return length on the Eclipse Shutters Track System Order Form

L

SPECIALTY SHAPES

Features and Benefits

Specialty Shapes (U.S. Patent # U58, 205, 384 B2) have been uniquely designed to incorporate horizontal louvers which provides a consistent look with the shutters below. Vertical supports divide larger arches into multiple sections which can also match the shutter below. By using the same frames, louvers, and tilt control as our traditional shutters, the result is a stunning, seamless look.

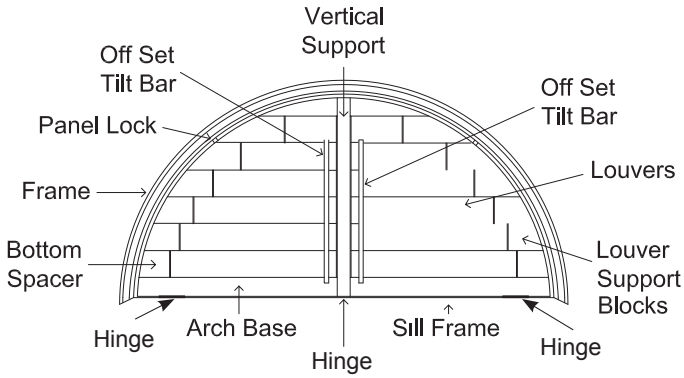

LOUVER OPTIONS

Louvers operate freely in both directions

- 2½"
- 3½"

Note: 4½" Louver not available

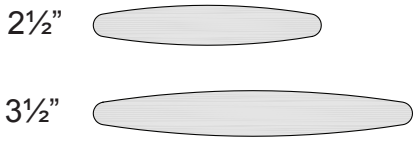

FRAME OPTIONS

- Deluxe Trim Frame (Inside Mount Only)
- Trim Frame (Inside Mount Only)
- Z Frame (Inside Mount Only)
- Bullnose Z Frame (Inside Mount Only)
- L Frame (Inside or Outside Mount)
- Casing Frame (Outside Mount Only)
- Casing Sill Frame (Inside or Outside Mount)
- S Frame (Outside Mount Only)
- NO FRAME IS NOT AVAILABLE

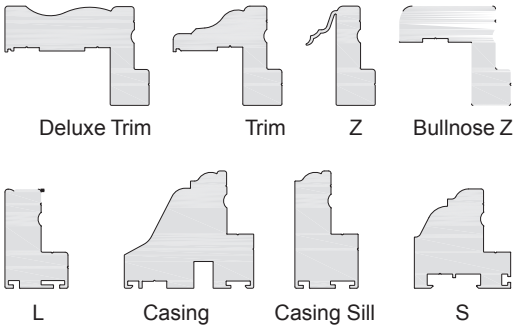

PRICING

Arch pricing is based on either the width or height, which ever is greater (rounded up to the next full inch). Shipping charges apply. Linear Width (in Inches) x Price Per Linear Inch = Arch Price + Shipping Charges or Linear Height (in Inches) x Price Per Linear Inch = Arch Price + Shipping Charges

TEMPLATES

Templates are not required unless the radius is inconsistent (see page L23 for details). The order form has been designed to capture the information required for building an arch. It may be necessary to provide a sketch that contains all dimensions of the opening (see page L17-18 for details).

TILT OPTIONS

- Tilt Bar - Available for any arch, either front or rear center or front off set.
- Rear Tilt (Clearview) - Available only if the arch has a full length straight side or a vertical support.
- Gear - Not available.

The size and configuration of the shutter will, in many cases, determine the tilt mechanism.

Example: A half-circle with no vertical support would have a tilt bar (either front or rear), but a half-circle with 1 vertical support could have either Rear Tilt (Clearview) on each section or an off-set tilt bar. See the diagrams below.

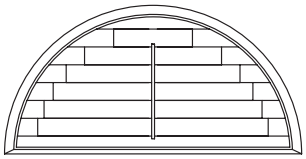
Half-Circle with Tilt Bar (Front Center)
No Vertical Support

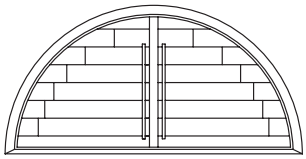
Half-Circle with Tilt Bar (Off Set)
One Vertical Support

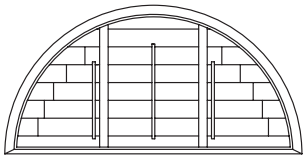
Half-Circle with Tilt Bar
Two Vertical Supports

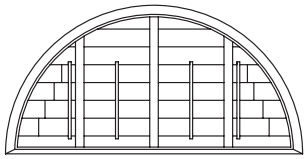
Half-Circle with Tilt Bar
Three Vertical Supports

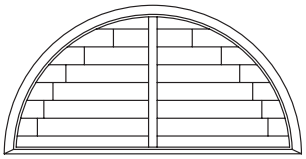
Half-Circle with Rear Tilt (Clearview)
One Vertical Support

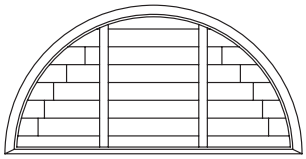
Half-Circle with Rear Tilt (Clearview)
Two Vertical Supports

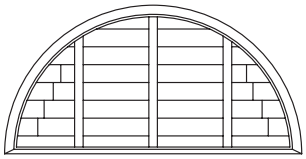
Half-Circle with Rear Tilt (Clearview)
Three Vertical Supports

Each section of an arch includes its own set of louvers and a tilt mechanism (Tilt Bar or Rear Tilt).

ARCH PANEL ATTACHMENT

- Panel Lock - spring loaded plungers, lock into a groove in the frame. Ramps are supplied for the bottom frame. These will act as spacers for the panel.
- Once the frame is installed, the panel snaps into place. Magnets will be supplied to ensure the panel is secure.
- Hinges will be installed on all shapes with a straight bottom to connect the panel to the frame.

Hinges Attach
Panels to Frames

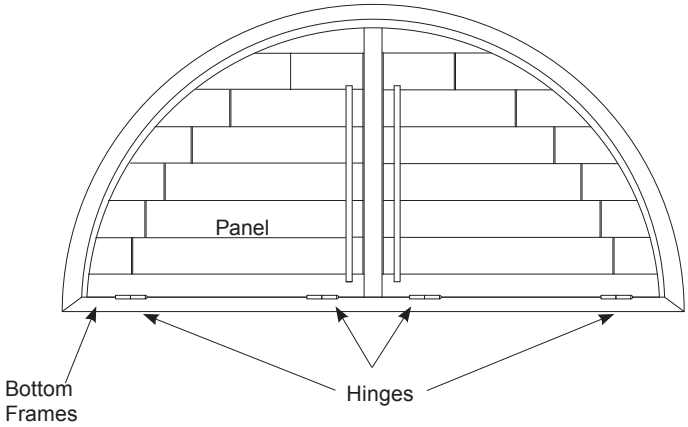

A2L QUARTER-CIRCLE LEFT

Template not required if width = height.

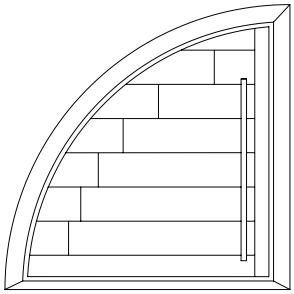

Quarter-Circle Left with Tilt Bar & No Vertical Support

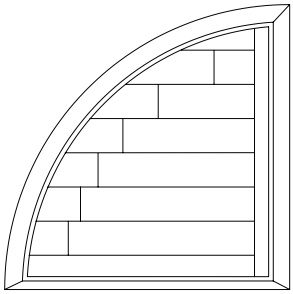

Quarter-Circle Left with Rear Tilt (Clearview) & No Vertical Support

Specifications - No Vertical Support	
Minimum Width:	12”
Maximum Width:	30”
Minimum Height:	12”
Maximum Height:	30”

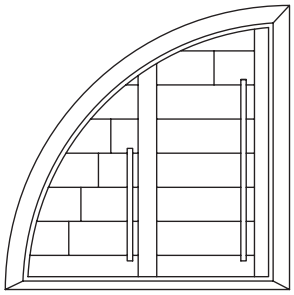

Quarter-Circle Left with Tilt Bar & 1 Vertical Support

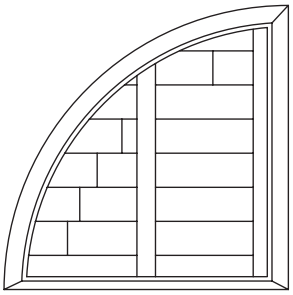

Quarter-Circle Left with Rear Tilt (Clearview) & 1 Vertical Support

Specifications - One Vertical Support	
Minimum Width:	24”
Maximum Width:	40”
Minimum Height:	24”
Maximum Height:	40”

A2R QUARTER-CIRCLE RIGHT

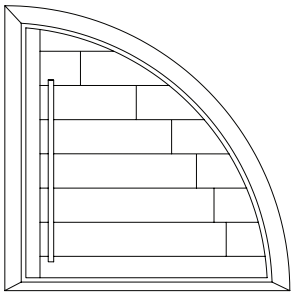

Quarter-Circle Right with Tilt Bar & No Vertical Support

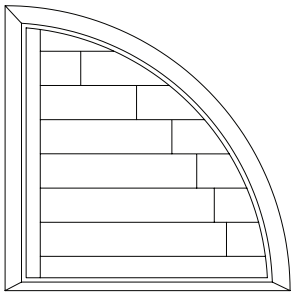

Quarter-Circle Right with Rear Tilt (Clearview) & No Vertical Support

Specifications - No Vertical Support	
Minimum Width:	12”
Maximum Width:	30”
Minimum Height:	12”
Maximum Height:	30”

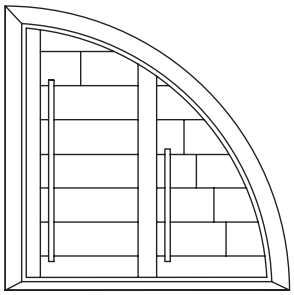

Quarter-Circle Right with Tilt Bar & 1 Vertical Support

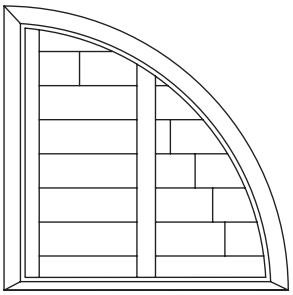

Quarter-Circle Right with Rear Tilt (Clearview) & 1 Vertical Support

Specifications - One Vertical Support	
Minimum Width:	24”
Maximum Width:	40”
Minimum Height:	24”
Maximum Height:	40”

Note: The height of a quarter-circle equals the width.

See Page L2 for available tilt options.

A1 HALF-CIRCLE

Template not required if width = 1/2 height.

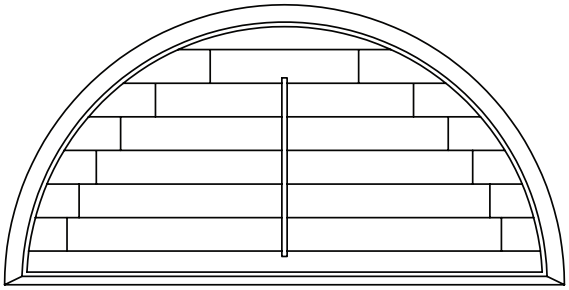

Half-Circle with Tilt Bar & No Vertical Support

Specifications - No Vertical Support

Minimum Width:	24”
Maximum Width:	30”
Minimum Height:	12”
Maximum Height:	15”

Rear Tilt (Clearview) not available

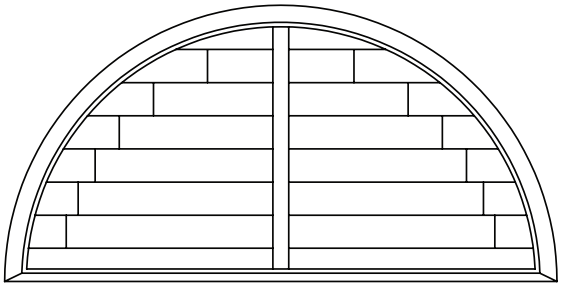

Half-Circle with Rear Tilt (Clearview) & 1 Vertical Support

Specifications - One Vertical Support

Minimum Width:	24”
Maximum Width:	60”
Minimum Height:	12”
Maximum Height:	30”

Rear Tilt (Clearview) and tilt bar optional

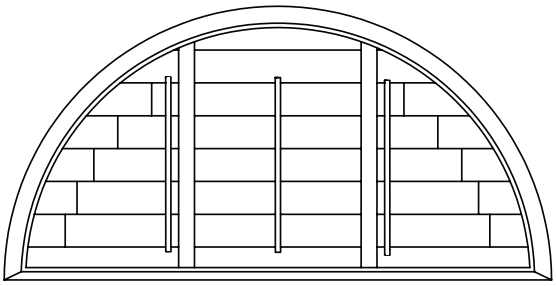

Half-Circle with Tilt Bar, and 2 Vertical Supports

Specifications - Two Vertical Supports

Minimum Width:	24”
Maximum Width:	72”
Minimum Height:	12”
Maximum Height:	36”

Rear Tilt (Clearview) and tilt bar optional

(tilt bar on outside sections will be off-set only)

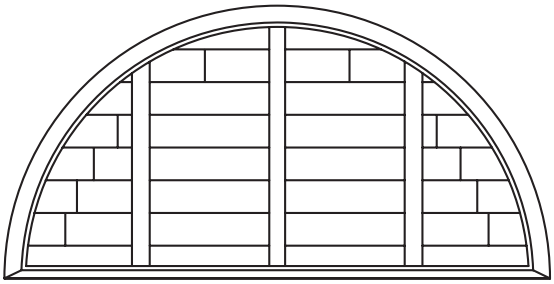

Half-Circle with Rear Tilt (Clearview) & Tilt Bar, and 3 Vertical Supports

Specifications - Three Vertical Supports

Minimum Width:	24”
Maximum Width:	92”
Minimum Height:	12”
Maximum Height:	46”

Rear Tilt (Clearview) and tilt bar optional

(tilt bar on outside sections will be off-set only)

Note: The height of a half circle measures 1/2 the width. If the height measures more than 1” over half the width, then specify A4 Extended Eyebrow. If the height measures 1” less than half the width, then specify A5 Eyebrow.

See Page L2 for available tilt options.

Shapes and Specifications

Note: A frame can have an extended frame point - the smaller the angle, the more the frame can extend beyond the measured point.

A5 Eyebrow

Template required

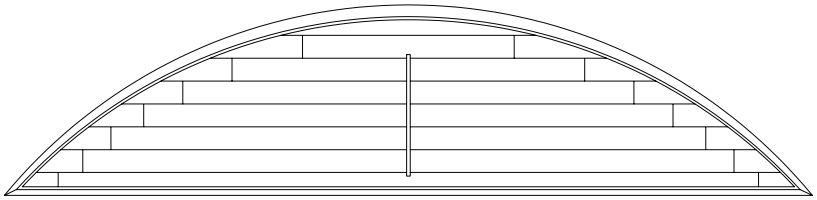

Eyebrow with Tilt Bar & No Vertical Support

Specifications - No Vertical Support

Minimum Width:	24”
Maximum Width:	30”
Minimum Height:	12”
Maximum Height:	15”

Rear Tilt (Clearview) not available

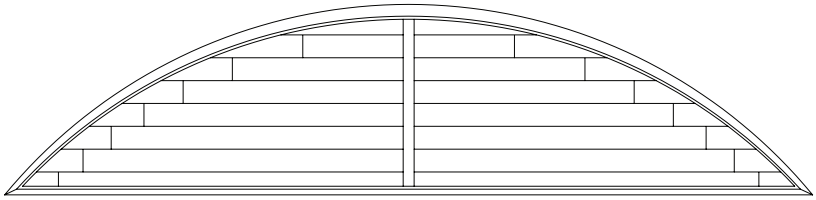

Eyebrow with Rear Tilt (Clearview) & 1 Vertical Support

Specifications - One Vertical Support

Minimum Width:	24”
Maximum Width:	60”
Minimum Height:	12”
Maximum Height:	30”

Rear Tilt (Clearview) and tilt bar optional

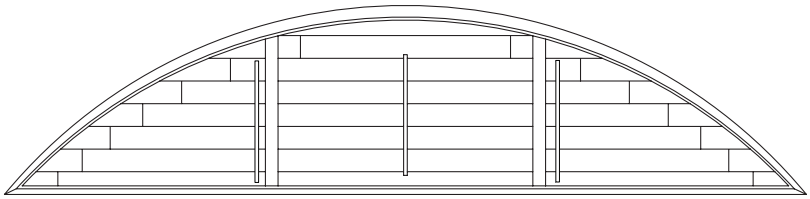

Eyebrow with Tilt Bar, and 2 Vertical Supports

Specifications - Two Vertical Supports

Minimum Width:	24”
Maximum Width:	72”
Minimum Height:	12”
Maximum Height:	36”

Rear Tilt (Clearview) and tilt bar optional

(tilt bar on outside sections will be off-set only)

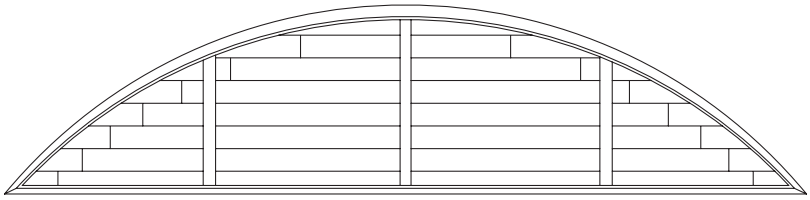

Eyebrow with Rear Tilt (Clearview) & Tilt Bar, and 3 Vertical Supports

Specifications - Three Vertical Supports

Minimum Width:	24”
Maximum Width:	92”
Minimum Height:	12”
Maximum Height:	46”

Rear Tilt (Clearview) and tilt bar optional

(tilt bar on outside sections will be off-set only)

See Page L2 for available tilt options.

Shapes and Specifications

A4 Extended Eyebrow
Template not required

T5 Gothic
Template Required

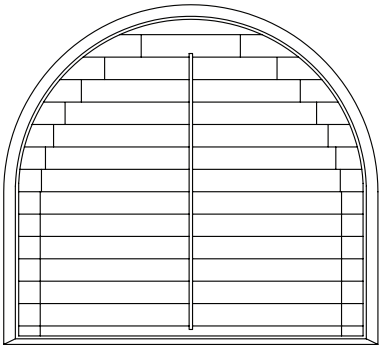

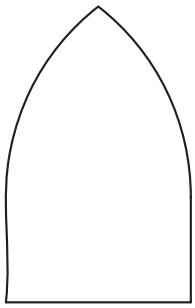

Tilt Bar & No Vertical Support

Specifications - No Vertical Support

Minimum Width:	24”
Maximum Width:	30”
Minimum Height:	16”
Maximum Height:	39”
Minimum Leg Length:	6”
Maximum Leg Length:	24”

Rear Tilt (Clearview) not available

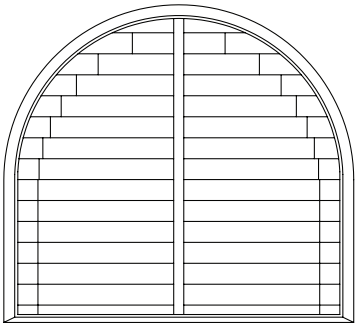

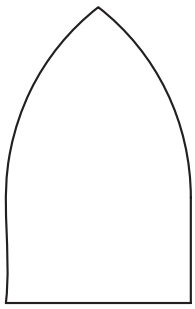

Rear Tilt (Clearview) & 1 Vertical Support

Specifications - One Vertical Support

Minimum Width:	24”
Maximum Width:	60”
Minimum Height:	16”
Maximum Height:	39”
Minimum Leg Length:	6”
Maximum Leg Length:	24”

Rear Tilt (Clearview) and tilt bar optional

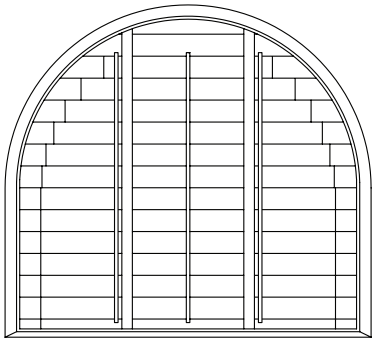

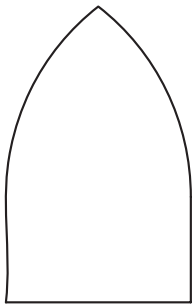

Tilt Bar and Rear Tilt (Clearview), and
2 Vertical Supports

Specifications - Two Vertical Supports

Minimum Width:	24”
Maximum Width:	72”
Minimum Height:	16”
Maximum Height:	39”
Minimum Leg Length:	6”
Maximum Leg Length:	24”

Rear Tilt (Clearview) and tilt bar optional

(tilt bar on outside sections will be off-set only)

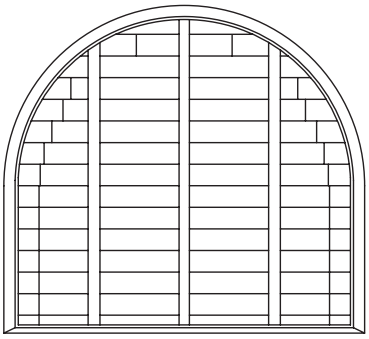

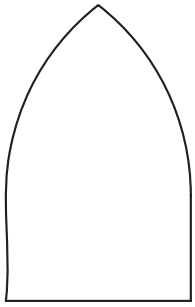

Rear Tilt (Clearview), and
3 Vertical Supports

Specifications - Three Vertical Supports

Minimum Width:	24”
Maximum Width:	84”
Minimum Height:	16”
Maximum Height:	39”
Minimum Leg Length:	6”
Maximum Leg Length:	24”

Rear Tilt (Clearview) and tilt bar optional

(tilt bar on outside sections will be off-set only)

Note: An Extended Eyebrow is an extended Half Circle. The height minus the leg height should equal 1/2 of the width.
See Page L2 for available tilt options.

A4 Extented Eyebrow

Template not required

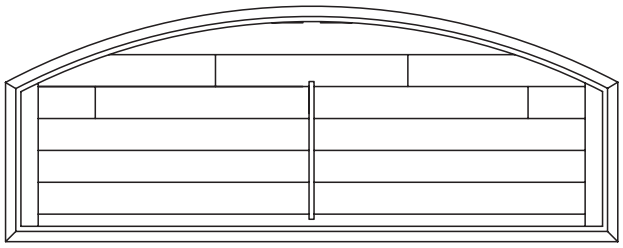

Eyebrow with Tilt Bar & No Vertical Support

Specifications - No Vertical Support

Minimum Width:		24”
Maximum Width:		30”
Minimum Height:		12”
Maximum Height:		36”
Minimum Leg Length:	C, S	6”
	L, Z, BT, T, DT	4”
Maximum Leg Length:		24”

Rear Tilt (Clearview) not available

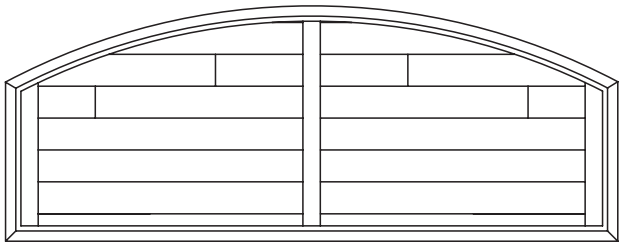

Eyebrow with Rear Tilt (Clearview) or Tilt Bar & 1 Vertical Support

Specifications - One Vertical Support

Minimum Width:		24”
Maximum Width:		60”
Minimum Height:		12”
Maximum Height:		36”
Minimum Leg Length:	C, S	6”
	L, Z, BT, T, DT	4”
Maximum Leg Length:		24”

Rear Tilt (Clearview) or off-set tilt bar optional

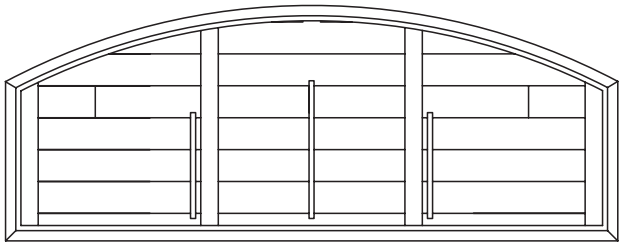

Eyebrow with Rear Tilt (Clearview) or Tilt Bar, and 2 Vertical Supports

Specifications - Two Vertical Supports

Minimum Width:		24”
Maximum Width:		72”
Minimum Height:		12”
Maximum Height:		36”
Minimum Leg Length:	C, S	6”
	L, Z, BT, T, DT	4”
Maximum Leg Length:		24”

Rear Tilt (Clearview) and tilt bar optional
(tilt bar on outside sections will be off-set only)

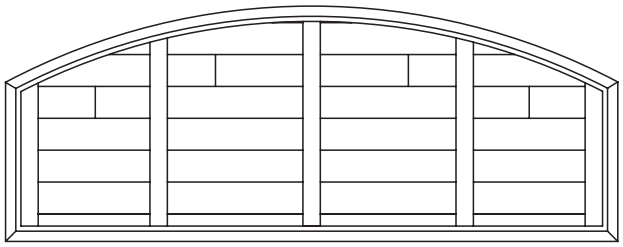

Eyebrow with Rear Tilt (Clearview) or Tilt Bar and 3 Vertical Supports

Specifications - Thee Vertical Supports

Minimum Width:		24”
Maximum Width:		108”
Minimum Height:		12”
Maximum Height:		36”
Minimum Leg Length:	C, S	6”
	L, Z, BT, T, DT	4”
Maximum Leg Length:		24”

Rear Tilt (Clearview) and tilt bar optional
(tilt bar on outside sections will be off-set only)

A8 Pentagon

Template not required

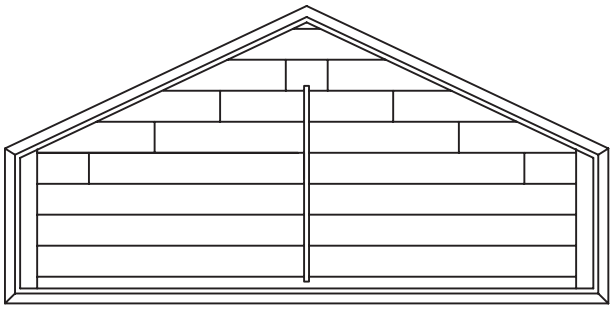

Pentagon with Tilt Bar & No Vertical Support

Specifications - No Vertical Support		
Minimum Width:		24”
Maximum Width:		30”
Minimum Height:		12”
Maximum Height:		48”
Minimum Leg Length:	C,S	6”
	L, Z, BT, T, DT	4”
Maximum Leg Length:		24”
Rear Tilt (Clearview) not available		

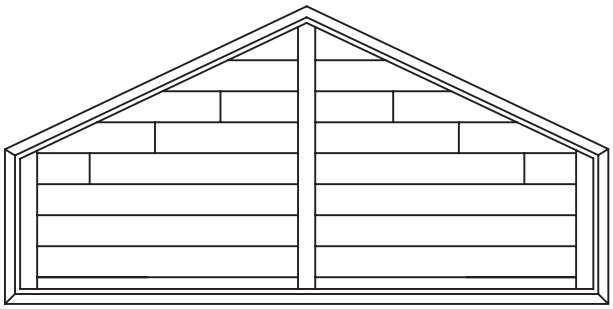

Pentagon with Rear Tilt (Clearview) or Tilt Bar & 1 Vertical Support

Specifications - One Vertical Support		
Minimum Width:		24”
Maximum Width:		60”
Minimum Height:		12”
Maximum Height:		48”
Minimum Leg Length:	C,S	6”
	L, Z, BT, T, DT	4”
Maximum Leg Length:		24”
Rear Tilt (Clearview) or off-set tilt bar optional		

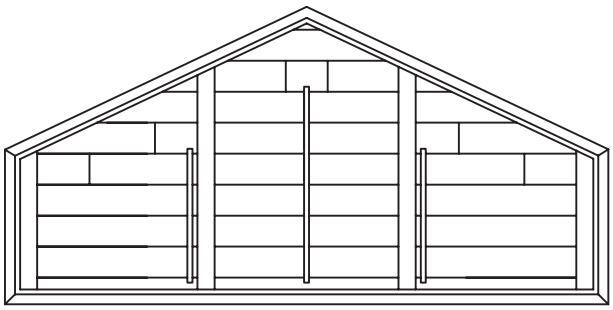

Pentagon with Rear Tilt (Clearview) or Tilt Bar, and 2 Vertical Supports

Specifications - Two Vertical Supports		
Minimum Width:		24”
Maximum Width:		72”
Minimum Height:		12”
Maximum Height:		48”
Minimum Leg Length:	C,S	6”
	L, Z, BT, T, DT	4”
Maximum Leg Length:		24”
Rear Tilt (Clearview) or tilt bar optional		
(tilt bar on outside sections will be off-set only)		

A7 Angle Extended

Template not required

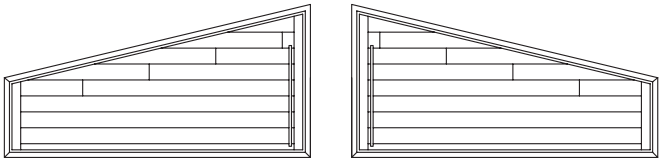

Angle Extended with Rear Tilt (Clearview) or Tilt Bar & No Vertical Support

Specifications - No Vertical Support

Minimum Width:		24”
Maximum Width:		30”
Minimum Height:		12”
Maximum Height:		30”
Minimum Leg Length:	C,S	6”
	L, Z, BT, T, DT	4”
Maximum Leg Length:		30”

Rear Tilt (Clearview) not available

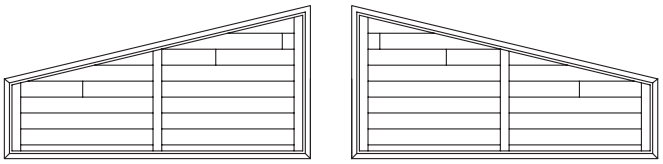

Angle Extended with Rear Tilt (Clearview) or Tilt Bar and 1 Vertical Support

Specifications - One Vertical Support

Minimum Width:		24”
Maximum Width:		60”
Minimum Height:		12”
Maximum Height:		40”
Minimum Leg Length:	C,S	6”
	L, Z, BT, T, DT	4”
Maximum Leg Length:		40”

Rear Tilt (Clearview) or off-set tilt bar optional

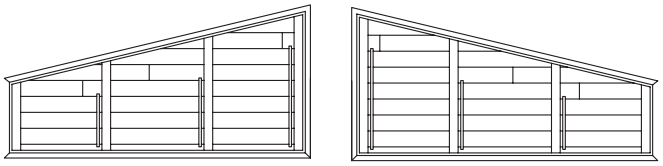

Angle Extended with Rear TIt (Clearview) or Tilt Bar, and 2 Vertical Supports

Specifications - Two Vertical Supports

Minimum Width:		24”
Maximum Width:		72”
Minimum Height:		12”
Maximum Height:		60”
Minimum Leg Length:	C,S	6”
	L, Z, BT, T, DT	4”
Maximum Leg Length:		60”

Rear Tilt (Clearview) or tilt bar optional
(tilt bar on outside sections will be off-set only)

Shapes and Specifications

Note: A frame can have an extended frame point - the smaller the angle, the more the frame can extend beyond the measured point.

A7 Angle Extended

Template not required

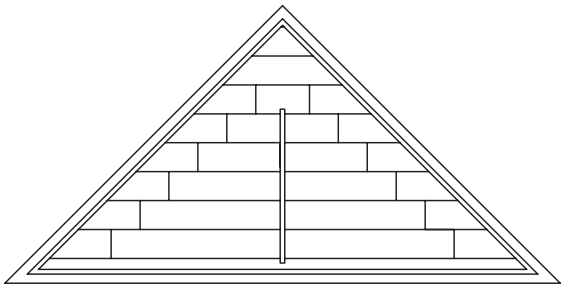

With Tilt Bar & No Vertical Support

Specifications - No Vertical Support

Minimum Width:	24”
Maximum Width:	30”
Minimum Height:	12”
Maximum Height:	15”

Rear Tilt (Clearview) not available

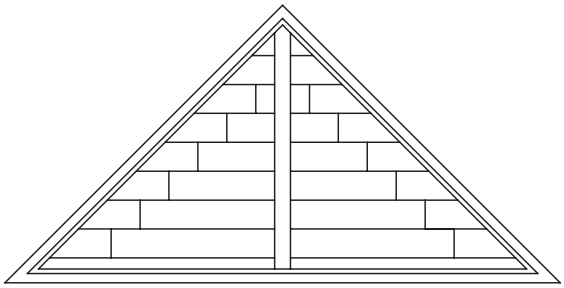

With Rear Tilt (Clearview) or Tilt Bar and 1 Vertical Support

Specifications - One Vertical Support

Minimum Width:	24”
Maximum Width:	60”
Minimum Height:	12”
Maximum Height:	30”

Rear Tilt (Clearview) or off-set tilt bar optional

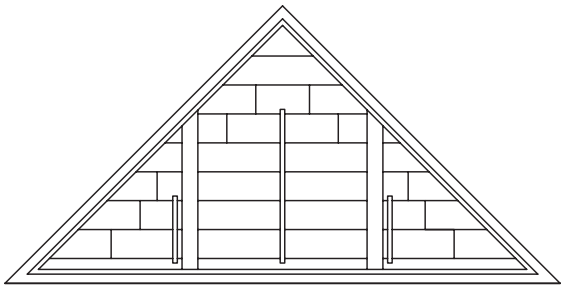

With Tilt Bar, and 2 Vertical Supports

Specifications - Two Vertical Supports

Minimum Width:	24”
Maximum Width:	72”
Minimum Height:	12”
Maximum Height:	36”

Rear Tilt (Clearview) and tilt bar optional
(tilt bar on outside sections will be off-set only)

Shapes and Specifications

Note: A frame can have an extended frame point - the smaller the angle, the more the frame can extend beyond the measured point.

A7 Angle Extended

Template not required

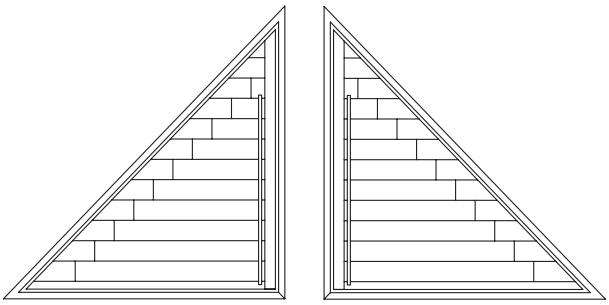

With Rear Tilt (Clearview) or Tilt Bar & No Vertical Support

Specifications - No Vertical Support

Minimum Width:	12”
Maximum Width:	30”
Minimum Height:	12”
Maximum Height:	30”

Rear Tilt (Clearview) not available

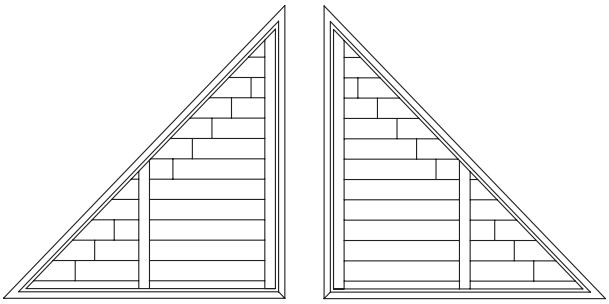

With Rear Tilt (Clearview) or Clearview and 1 Vertical Support

Specifications - One Vertical Support

Minimum Width:	24”
Maximum Width:	40”
Minimum Height:	24”
Maximum Height:	40”

Rear Tilt (Clearview) and tilt bar optional

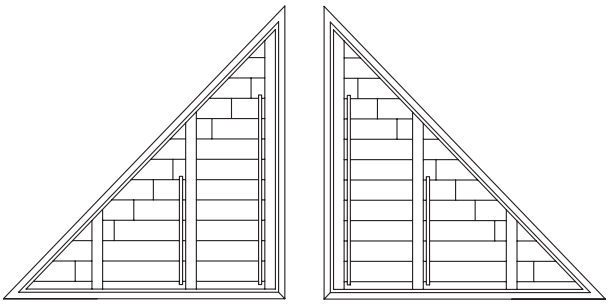

With Rear Tilt (Clearview) Tilt Bar, and 2 Vertical Supports

Specifications - Two Vertical Supports

Minimum Width:	24”
Maximum Width:	60”
Minimum Height:	24”
Maximum Height:	60”

Rear Tilt (Clearview) and tilt bar optional
(tilt bar on outside sections will be off-set only)

T3 Hexagon

Template required

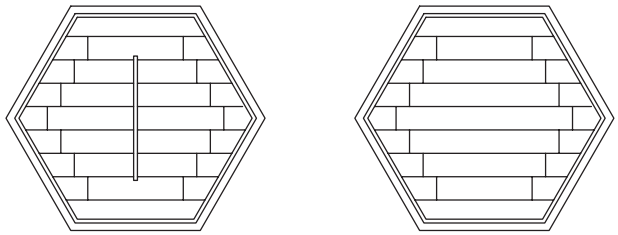

Hexagon with Tilt Bar and No Vertical Support

Specifications - No Vertical Support

Minimum Width:	12”
Maximum Width:	30”
Minimum Height:	12”
Maximum Height:	30”

Rear Tilt (Clearview) not available

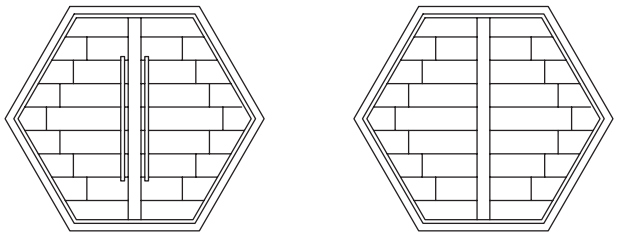

Hexagon with Rear Tilt (Clearview) or Tilt Bar 1 Vertical Support

Specifications - One Vertical Support

Minimum Width:	30”
Maximum Width:	40”
Minimum Height:	30”
Maximum Height:	40”

Rear Tilt (Clearview) and tilt bar optional

T4 Octagon

Template not required

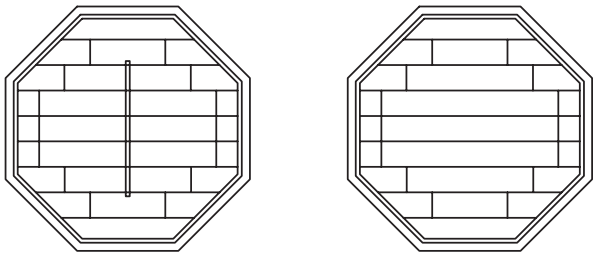

Octagon with Tilt Bar and No Vertical Support

Specifications - No Vertical Support

Minimum Width:	12”
Maximum Width:	30”
Minimum Height:	12”
Maximum Height:	30”

Rear Tilt (Clearview) not available

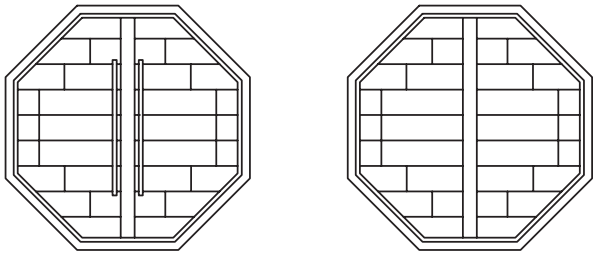

Octagon with Rear Tilt (Clearview) or Tlit Bar and 1 Vertical Support

Specifications - One Vertical Support

Minimum Width:	30”
Maximum Width:	40”
Minimum Height:	30”
Maximum Height:	40”

Rear Tilt (Clearview) and tilt bar optional

Vertical Support

A Vertical Support is the vertical member of the arch that divides the arch into multiple sections and provides strength and rigidity. Smaller arches (less than 30”) do not require Vertical Supports but may be ordered with them. Vertical Supports are required based on width. The specifications are listed below.

VERTICAL SUPPORT REQUIREMENTS

- 0 Vertical Supports = 0” - 30”
- 1 Vertical Support = 30 1/8” - 60”
- 2 Vertical Supports = 60 1/8” - 72”
- 3 Vertical Supports = 72 1/8” - 108”

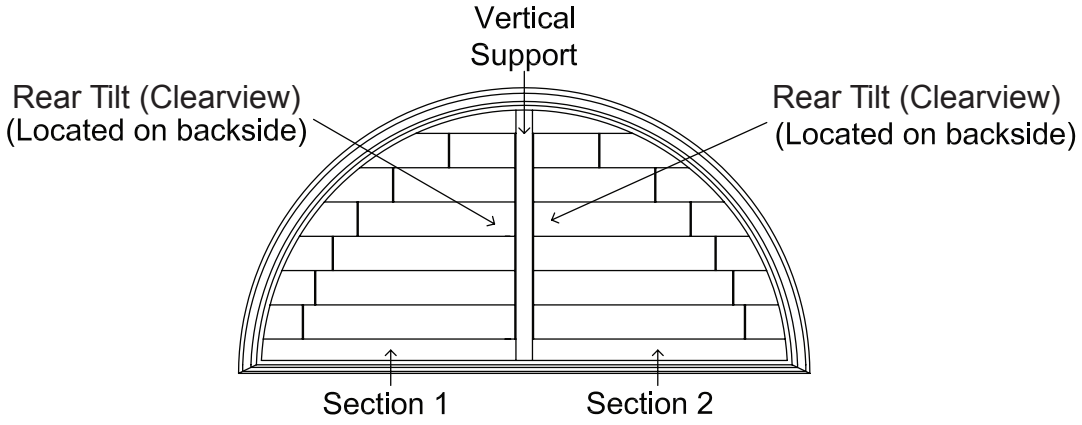

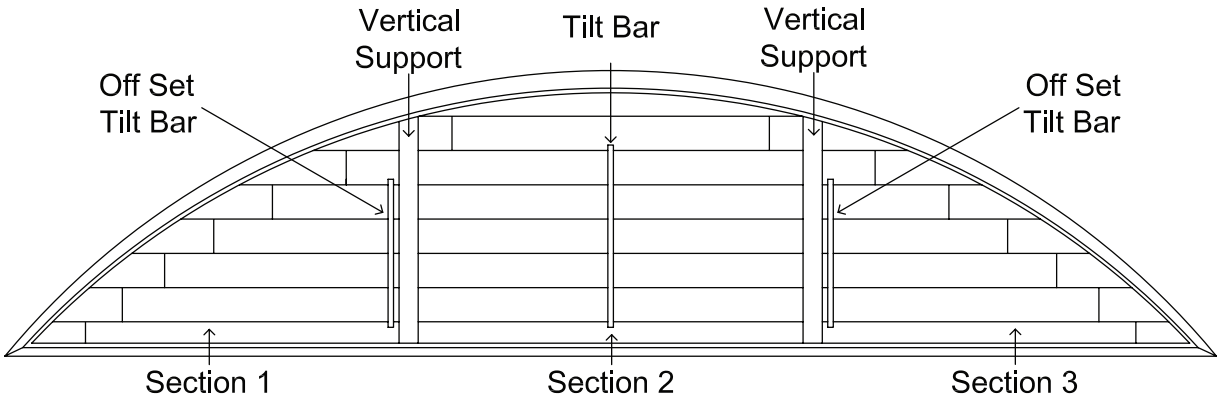

Vertical Support

UNEVEN VERTICAL SUPPORT LOCATIONS

Vertical Support Distances from left side (centre of support)

1st ☐ 2nd ☐ 3rd ☐

Inside Mount

1. Record the number of sections on the Specialty Shape Order Form
2. Measure from the left inside edge of the opening to the center of the first Vertical Support location
3. Record this measurement on the order form under Vertical Support locations
4. Repeat steps 2 and 3 measuring from the left edge of the opening to the center of the second Vertical Support
5. Submit the shutter and arch orders together

Note: When 3 vertical supports are ordered without specific locations, the middle vertical support will be in the center of the arch.

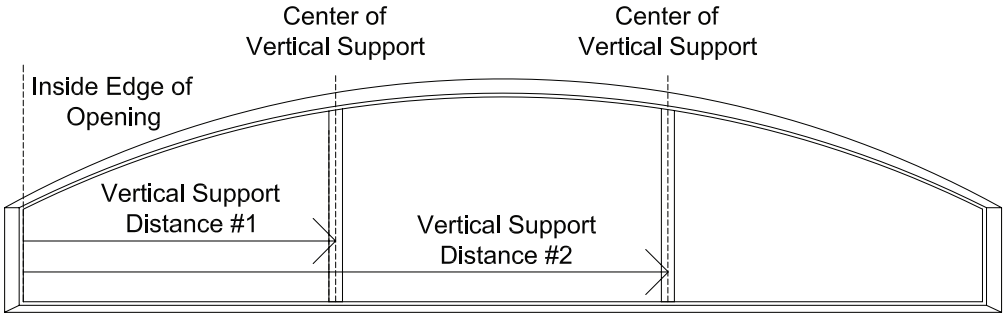

Outside Mount

1. Record the number of sections on the Specialty Shape Order Form
2. Measure from the left outside edge of where the arch is to be installed to the center of each Vertical Support location
3. Record this measurement on the order form under Vertical Support locations
4. Repeat steps 2 and 3 measuring from the left edge of the opening to the center of the second Vertical Support
5. Submit the shutter and arch orders together

Note: When 3 vertical supports are ordered without specific locations, the middle vertical support will be in the center of the arch.

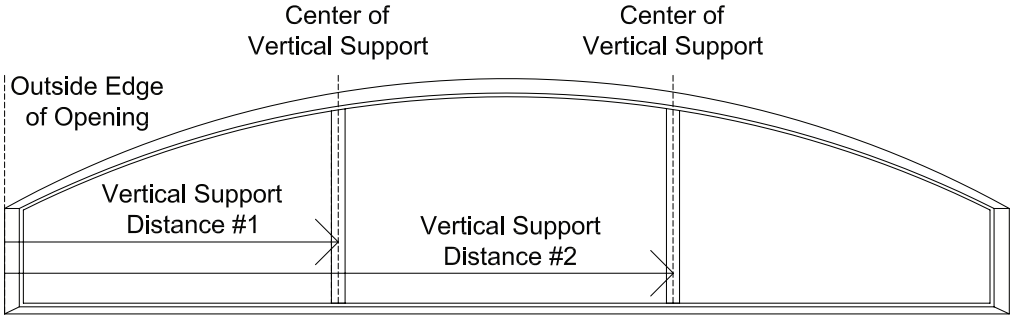

Note: The maximum distance between vertical supports is 32 ½".

Vertical Support

When ordering larger shutters that require Vertical Supports or when adding Vertical Supports to smaller shutters, it is important to remember that there will be a size difference between the Vertical Support, Vertical Jambs and the T Posts in the shutter below.
Vertical Support Width = 1 3/4”
(2) Vertical Jamb Widths = 3 1/2”
(2) Vertical Jamb Widths + T Post = 4 3/4”

Example: See diagram below. The two panel shutter has a two section arch above. The Vertical Support in the arch is half the size of the jambs but is in alignment with the vertical jambs of the panel below.

Note: In order to achieve a consistent look, order the shutter below and the arch above with the same number of panels and sections. Submit the shutter and arch orders together. Indicate directions on the Specialty Shapes order form section shown below.

Template details	Shape to line up with shutters below	Shape not lining up with shutters below
☐ Template attached	☐ Both orders with same due date	☐ Both orders with same due date
☐ Template data sent	☐ Line # of shutters below _____	☐ Both orders with different due dates
Date: _____	☐ Line # of shape _____	*(If on DC then order as 2 seperate orders)*

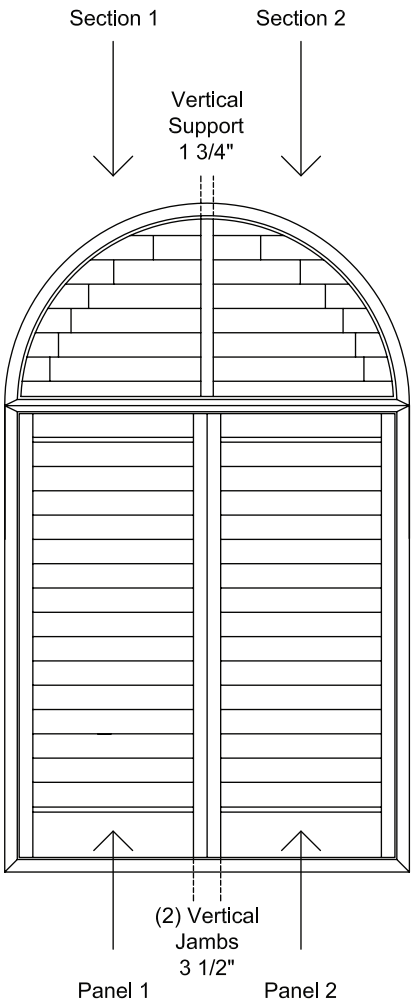

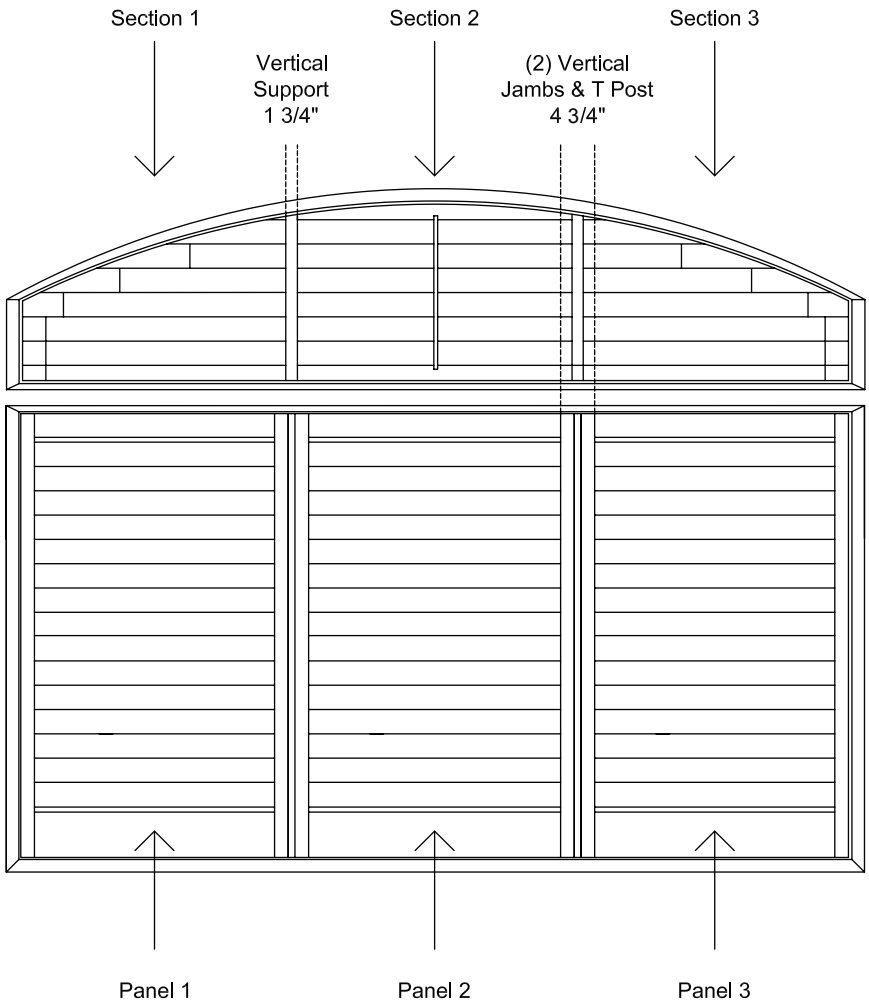

MEASURING ROUND TOP SHAPES

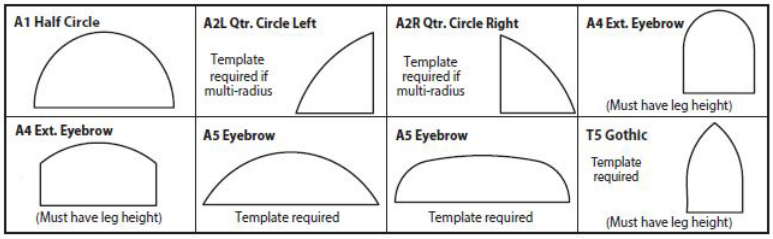

1. Depth clearance - verify frame, operating system & louver clearances (shape clearances are the same as standard shutters)
2. Measure the width - Inside Mount: measure the width of the window frame along the bottom of the opening. Outside Mount: measure the width from outside edge of shutter frame to shutter frame on the bottom of the opening. Indicate in width column on the Specialty Shapes order form.
3. Measure the height to 1/8”
   A) Inside Mount: measure the height of the window frame at the center to the highest vertical point. Outside Mount: measure from the outside edge of shutter frame at the center to the highest vertical point of the top frame. Indicate in height column on the Specialty Shapes order form.
   B) From the left side, mark increments to center as shown below on the “Round Top Shape Measurements” .
   C) From the right side, mark increments to center as shown below on the “Round Top Shape Measurements” .

CHECK SPECIFICATIONS FOR MINIMUM AND MAXIMUM SIZES – REVERSE SIDE

Round Top Shape measurements from the left side (to centre if rounded top)

2"	4"	6"	8"	10"	15"	20"	30"	40"	50"

Round Top Shape measurements from the right side (to centre if rounded top)

50"	40"	30"	20"	15"	10"	8"	6"	4"	2"

Shape measurements from the right side (to centre if rounded top)

4. Measure legs - Inside Mount: measure from the bottom of the opening on each side to the start of the round top radius Outside Mount: measure from the bottom of the outer edge of the shutter frame to the start of the round top radius. Indicate as shown on the “Leg Height” chart below.

Leg Height
for A4 Ext. Eyebrow and T5 Gothic

Left Leg Height		Right Leg Height	

5. Vertical Supports; indicate as required (see page L16).
6. Framed arch mounted to framed shutter below, must both have the same width measurement.
   A) Trim Frame, Deluxe Trim, or Bullnose Z Frame are recommended when variances are excessive to ensure the frame will cover the increased gap between the frame and the opening. For short elliptical shapes, these frames will likely have excessive variance between the top shape and the opening below.

MEASURING STRAIGHT SIDED SHAPES

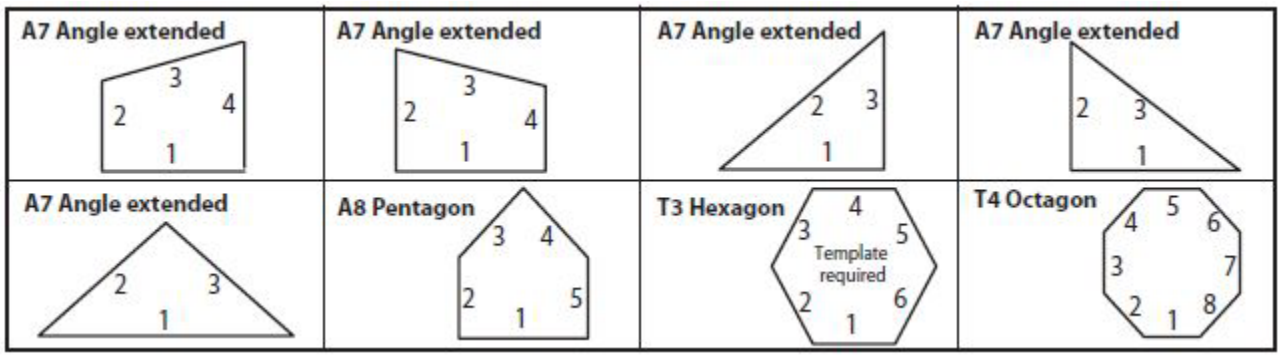

1. Depth clearance - verify frame, operating system & louver clearances (shape clearances are the same as standard shutters)
2. Measure the width - Inside Mount: measure the widest width of the window opening.
   Outside Mount: measure the widest width from the left outer edge of the shutter frame to the right outer edge of the shutter frame. Indicate in the width column on the Specialty Shapes order form.
3. Measure the height - Inside Mount: measure the tallest height of the window opening to 1/8".
   Outside Mount: measure the tallest height from the bottom outer edge of the shutter frame to the top outer edge of the shutter frame. Indicate in the width column on the Specialty Shapes order form.
4. Measure all sides - Inside Mount: measure the inside opening of each side
   Outside Mount: measure the outer edge of where the frame will be located for each side.
   Indicate as shown on the chart below.

Straight Sided Shapes diagrams have numbered sides. Insert measurements in the order on the diagram							
1	2	3	4	5	6	7	8

5. Vertical Supports; indicate as required (see page L16).

Creating a Template (Inside Mount)

CREATING A TEMPLATE FOR AN ARCH SHUTTER - TEMPLATES ARE ONLY REQUIRED FOR SHAPES THAT DO NOT HAVE A CONSISTENT RADIUS

Note: An arch with an inconsistent radius is one that the radius varies or changes along the arc. Example: the top center of the arc has a gradual curve while the sides curve sharply. Templates are required in these situations.

1. Templates will only be accepted if heavy paper such as craft paper or butcher paper is used
2. Make sure the paper will extend beyond the entire arch window both in width and height (tape multiple sheets together, if necessary)
3. The paper should be applied with tape (preferably painters tape so that it won't remove paint from the walls) or thumb tacks
4. The paper should be smooth and tight over the entire opening
5. Align straight edge of paper with the bottom of the opening
6. Using a pencil, outline or trace the perimeter of the arch
7. Make sure that all lines are clear and precise
8. Once the outline of the arch is complete, remove the template
9. Carefully measure the template for accuaracy
10. If the template is not accurate, then modify the template or remake it
11. Note all dimensions on the room side of the template
    A) Width
    B) Height (measure perpendicular to the bottom of the opening at the exact center)
    C) Side Legs (if applicable)
    D) Location of Vertical Supports (if applicable)
12. The measurements of the template, measurements on the template, and the measurements on the order form must all match.
13. Write "front" on the front side of the template (this will be the side of the paper facing in towards the room when it was attached to the window)
14. The following information must appear on the template:
    A) Company Name
    B) Customer Account Number
    C) Sidemark
    D) Purchase Order Number
    E) Date
15. Roll the template and send to fabricator.
    Please refer to page XX for fabricators address.
    Note: Templates will be retained for a period of 12 months, in case of remakes, damages, etc.

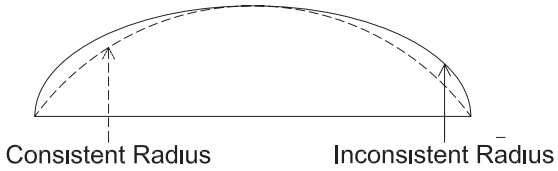

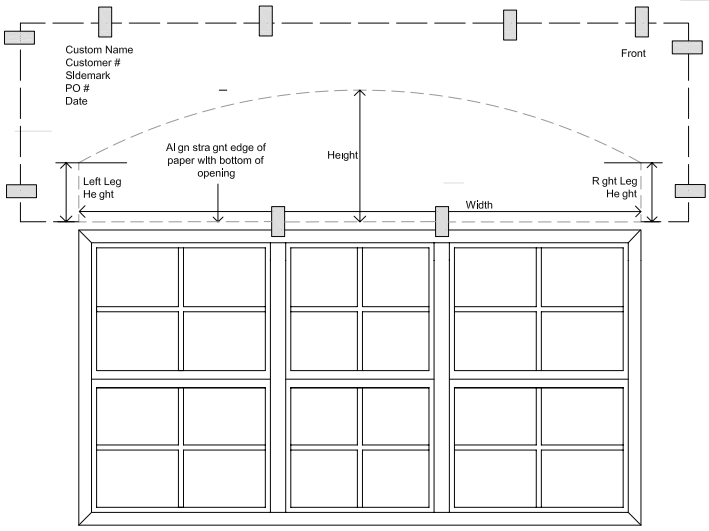

Creating a Template (Outside Mount)

CREATING A TEMPLATE FOR AN ARCH SHUTTER - TEMPLATES ARE ONLY REQUIRED FOR SHAPES THAT DO NOT HAVE A CONSISTENT RADIUS

1. Use heavy paper such as craft paper or butcher paper
2. Make sure the paper will extend beyond the entire arch window both in width and height (tape multiple sheets together, if necessary)
3. The paper should be applied with tape (preferably painters tape so that it won't remove paint from the walls) or thumb tacks
4. The paper should be smooth and tight over the entire opening
5. Align straight edge of paper with the bottom of the opening or the desired location of the bottom of the arch
6. Place the selected frame on the template at the desired distance away from the opening. Using a pencil, make a mark on the template behind the frame
7. Repeat step 6 in multiple locations to outline the entire arch
8. Connect all pencil marks to complete the shape
9. Make sure that all lines are clear and precise
10. Once the outline of the arch is complete, remove the template
11. Carefully measure the template for accuaracy
12. If the template is not accurate, then modify the template or remake it
13. Note all dimensions on the room side of the template
    A) Width
    B) Height (measure perpendicular to the bottom of the opening at the exact center)
    C) Side Legs (if applicable)
    D) Location of Vertical Supports (if applicable)
14. The measurements of the template, measurements on the template, and the measurements on the order form must all match.
15. Write "front" on the front side of the template (this will be the side of the paper facing in towards the room when it Vattached to the window)
16. The following information must appear on the template:
    A) Company Name
    B) Customer Account Number
    C) Sidemark
    D) Purchase Order Number
    E) Date
17. Roll the template and send to local fabricator along with copy of the order form. (Do not fold template)

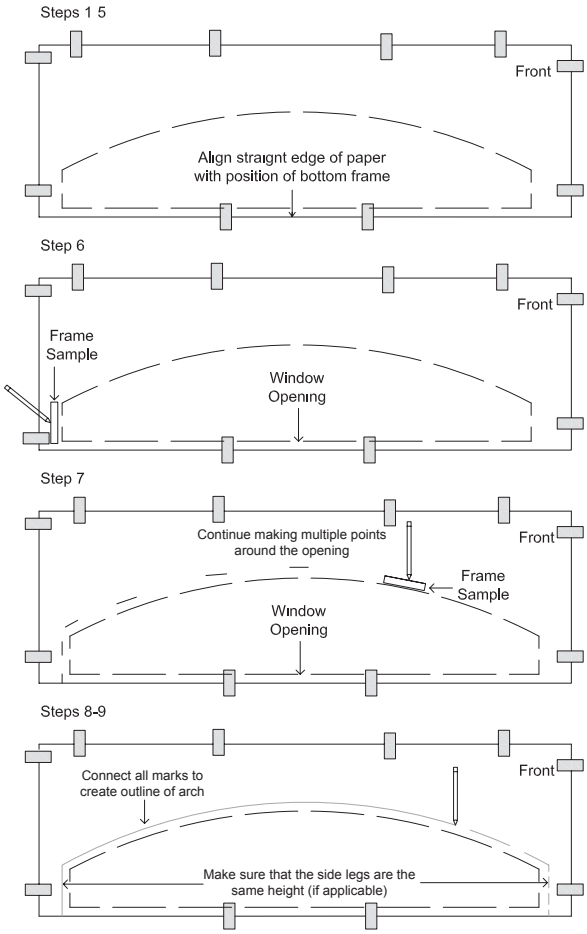

Note: Templates will be retained for a period of 12 months, in case of remakes, damages, etc.

Ordering

* Line	* Room Location	* Shape Type	No. of Vertical supports	Operating System	* Tilt Bar Options	* Colors	Hinge Color	* Louver Size	* Mount Type	* Frame Type	Width Ordered to 1/16"	Height Ordered to 1/16"	Panel Configuration / Panel Lock Standard	Sill Frame Location	C or L Frame Ext.
		Templates required for: Imperfect Arch Elliptical Quarter Circle Gothic	0 1 2 3	RT TC TOF TCR	C-F C-R OF-F OF-R	5136 5140 5151	P S B	2-1/2" 3-1/2" 4-1/2"	IM OM	Deluxe Trim Z L Casing Bullnose S	Inside Mount = Smallest Opening Size Outside Mount =Largest Frame Size		L - Left R - Right LL - Left Bi-Bold RR - Right B-Fold T - T-Post	None T T,B T,B,L etc.	Y N Max 1 Extension

Line	Indicate line number start from #1 for ease of referring to a confirmation or sales quotation
Room	Indicate the room name keeping under 12 characters to allow for full name to show on the product labels · Indicate each room difference for ease of sorting - example Bed 1 Left, Bed 1 Center, Bed 1 Right
Shape Type	Indicate the name of the shape
Vertical supports	As indicated on the chart on the chart above
Operating System	**CV** = Rear Tilt (a louver connector attaching to the side of louvers on the back of the panel to the hinge side) **TC** = Tilt Bar Front Center(a function bar used to tilt louvers with option for Center Front) **TOF** = Tilt Bar Front Offset Hinge Side(a function bar used to tilt louvers with option for Offset Front) **TCR** = Tilt Bar Center Rear
Tilt Bar Options	·**TC** Tilt Bar Center Front ·**TCR** Tilt Bar Centre Rear ·**TOF** Tilt Bar Offset Front
Colors	**· White / Cotton 5136 · Almond / Vanilla 5140 · Ivory / Pearl 5151**
Hinge Color	**P** = Painted **S** = Stainless Steel **B** = Brass
Louver Size	**2 ½" 3 ½" not available in 4 ½"**
Mount Type	**IM** - Inside Mount - factory takes deductions - IM Installation holes are predrilled · **IM** deductions are 1/8" on each side · **OM** - Outside Mount - Factory takes no deductions - OM Installation holes are predrilled
Frame Type	**L** = IM or OM , **C** = OM Casing , **T** = IM Trim, **DT**=IM Deluxe Trim, **Z** = IM Z, **B** = IM Bullnose Z · Frames must be used for all specialty shapes
Width	Ordered to the 1/16" - IM = smallest opening size OM = Largest frame size
Height	Ordered to the 1/8" - IM = smallest opening size OM = Largest frame size *(it is recommended to consider the smaller louver sizes for the shorter the heights)* ·Depending on the shape, support blocks could account for one full louver height
Frame Sill	Indicate by letter or number the Sill frame sides (dependant if round top or straight side **T** = Top, **B** = Bottom, **L** = Left, **R** = Right, **1** = side 1, **2** = side 2 etc.
L/C Ext	If required - Indicate the number of L Frame or Casing Frame Extensions
Template Attached	Template required when indicated on above chart or front of order form. Templates to be made on Kraft or butcher paper ONLY. · Template information is to be printed on the front side (facing into the room) · Information includes - Width, Height, Dealer Name, Tag Name · Template measurements must match the measurements given on the order form
Line up	If the shape need to line up exactly with a shutter below then indicate sales order and Line #
Round Top Measurements	Left side is measured from left to centre without going past centre at increments requested Right side is measured from right to centre without going past centre at increments requested Straight edge ruler slide inside T post is recommended for measuring - ask your representative
Leg height	Required leg height for tunnel, eyebrow, and gothic
Vertical supports	Required - as per chart above · Measured from the left side to the middle of the support
Straight sides measurements	Indicate measurement as per numbers on the form
Order Acknowledgement	Items that do not meet product specification as detailed in the manual, will be manufactured with a void warranty.

ARCH FRAME AND PANEL INSTALLATION - INSTALLED INDEPENDENT OF STANDARD SHUTTER

Step 1:
If multiple arches have been ordered for the same job, then review the labels for each arch to correctly identify which arch is used in each opening.

Step 2:
Set the frame in the opening and center. Make sure the bottom frame of the arch is level.

Step 3:
Install (2) screws into the curved portion of the frame. Screws should be placed in the top left and top right of the curve as illustrated below.

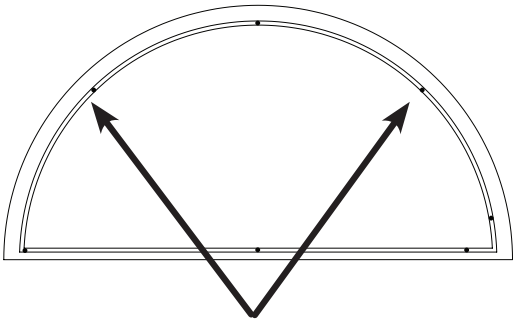

BEGIN WITH 2 INSTALLATION
HOLES DO NOT OVERTIGHTEN

Step 4:
With only (2) screws in place, it is safe to dry fit the panel. Make sure that the panel fits properly and the gap between the panel and the frame is consistent.

Step 5:
Move the bottom frame of the arch left or right to create the proper gaps around the arched panel. Make a vertical line on the bottom frame of the arch and onto the opening.

Step 6:
Remove the panel and move the bottom frame of the arch left or right until it is in alignment with the line on the opening.

Step 7:
Set a screw into the bottom frame of the arch to secure it to the window opening.

Step 8:
Place the panel back in the frame and make sure that the panel fits properly.

Step 9:
Set all remaining screws, making sure not to over-tighten. Set the panel back in place at any point to ensure proper alignment.

Step 10:
The panel will be held in place by the Panel Lock system. Adjust the depth of the plungers if necessary to provide good fit and hold the panel in the frame.

Step 11:
Install panel lock ramps along the bottom frame. These are used as spacers to ensure a consistent gap around the frame.

Step 12:
Magnets will be supplied with each arch depending on size. The magnets are used to help ensure the panel remains secure in the frame. Attach a magnet to the top center of the opening or evenly space magnets across the top frame. Hinges are attached to speciality shapes with straight bottom sides. The hinge connects the panel to the frame.

Step 13:
Install screw cover button plugs to hide installation holes. If button plugs will not seat properly, tighten the screw inside the installation hole so it does not interfere.

ARCH FRAME AND PANEL INSTALLATION - INSTALLED DIRECTLY TO SHUTTER BELOW

Step 1:
If multiple arches have been ordered for the same job, then review the labels for each arch to correctly identify which arch is used in each opening.

Step 2:
If an arch is to be mounted directly to the top of a shutter below, then install the shutter first. See Standard Window Installation Guidelines for details.

Step 3:
Set the frame in the opening. Align the bottom frame of the arch with the top frame of the shutter. (Use hand clamps to clamp the frames together while installing)

Step 4:
Set (2) 1" bypass screws (or similar) through the top frame of the shutter into the bottom frame of the arch.

Step 5:
With only (2) screws in place, it is safe to dry fit the panel. Make sure that the panel fits properly and the gap between the panel and the frame is consistent.

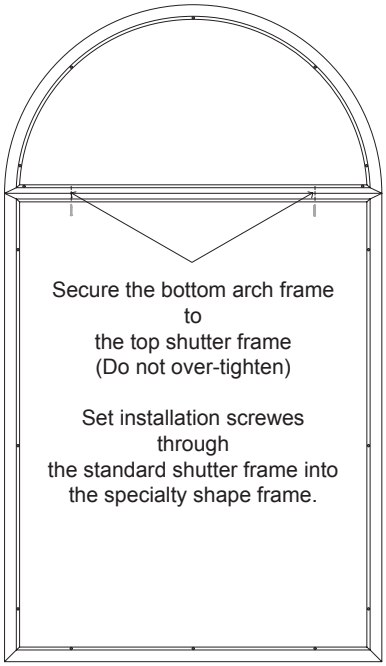

Step 6:
Move the top frame of the arch left or right to create the proper gaps around the arched panel. Make a vertical line on the top frame of the arch and onto the opening.

Step 7:
Remove the panel and move the top frame of the arch left or right until it is in alignment with the line on the opening.

Step 8:
Set a screw into the top frame of the arch to secure it to the window opening.

Step 9:
Place the panel back in the frame and make sure that the panel fits properly.

Step 10:
Set all remaining screws, making sure not to over-tighten. Set the panel back in place at any point to ensure proper alignment.

Step 11:
The panel will be held in place by the Panel Lock system. Adjust the depth of the plungers if necessary to provide good fit and hold the panel in the frame.

Step 12:
Install panel lock ramps along the bottom frame. These are used as spaces to ensure a consistent gap around the panel.

Step 13:
Magnets will be supplied with each arch depending on size. The magnets are used to help ensure the panel remains secure in the frame. Attach a magnet to the top center of the opening or evenly space magnets across the top frame. Hinges are attached to speciality shapes with straight bottom sides. The hinge connects the panel to the frame.

Step 14:
Install screw cover button plugs to hide installation holes. If button plugs will not seat properly, tighten the screw inside the installation hole so it does not interfere.

M

DECORATIVE SILL COVER

Decorative Sill Cover

Decorative sill cover is perfect for covering projecting window sills and can also be used on drywall openings to create the look of custom trimmed window.

- Mounting Type: Inside or Outside
- Minimum mounting depth: matches frame used on opening
- Face height: 3-1/2”
- Can be used with 3 and 4 sided framed units as well as unframed applications
- 4 sided framed applications require a Sill Frame bottom
- Decorative sill covers cannot be used with build-out.

  Note: Depth will vary based on sill type.

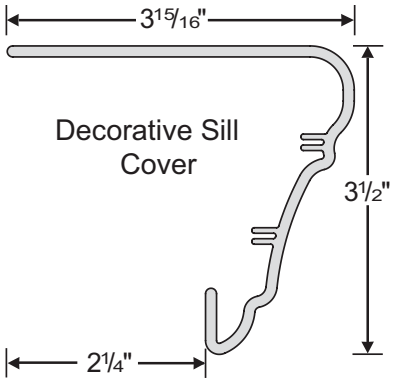

Decorative Sill Cover Ordering Considerations

ORDERING CONSIDERATIONS

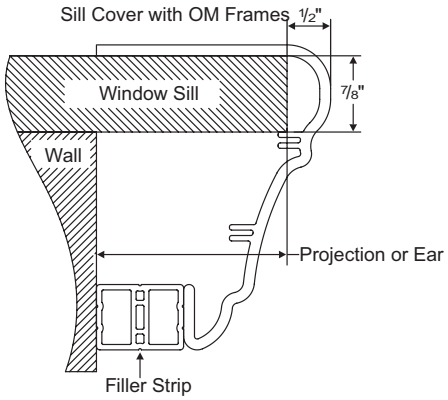

- Decorative Sill Cover can be figured with all frame types and without frame
- Inside mount (IM) frames can be used with 2, 3, or 4 sided frames. All 4 sided and Outside Mount (OM) frames must be ordered with sill bottom frame.
- All IM L – Frames are assumed flush mount.
- The Decorative Sill Cover can be ordered wider than the dimensions in the chart if necessary.
- T – Post installations are limited to 4 sided frame applications.
- Appropriate filler strips will accompany orders on OM applications to fill any gaps behind the Decorative Sill Cover
- The back of the sill cover will align with the back of the frame.

ORDERING CONSIDERATIONS

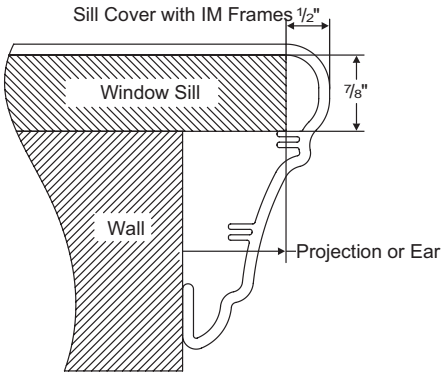

- The Decorative Sill Cover can be ordered wider than the dimensions in the chart if necessary.
  - OM frames can be ordered with a Decorative Sill Cover to extend into the opening by ordering as a Special Application.
  - See sill cover size limitation chart.

Decorative Sill Cover Dimension Chart

Refer to the Decorative Sill Cover dimension chart to determine the finished dimension of the Decorative Sill of the Decorative Sill Cover and maximum allowances for sill cover ears A, sill cover projection B, and sill cover depth into the opening C.

Standard Dimensions Chart

- The following dimensions assume the standard reveal of 1/4"
- Maximum window sill ear is 1/2" less than A value
- Maximum window sill projection is 1/2" less than B value
- Maximum window sill height is 7/8"
- OM applications the A value includes the standard reveal of 1/4"

Frame Type	A	B	C
Casing Frame	3-9/16"	2-15/16"	0"
L Frame OM	2-3/16"	2-3/4"	0"
Casing Sill Frame OM	2-3/16"	2-15/16"	0"
L Frame IM	1-1/8"	1-11/16"	2-1/16"
Casing Sill Frame IM	1-1/8"	1-11/16"	2-1/4"
Z Frame	1-1/8"	1-11/16"	1-1/4"
Trim Frame	1-15/16"	1-11/16"	1-1/8"
Mount Strip OM	1-7/8"	2-3/4"	0"
Mounting Strip IM - HSS	1-1/8"	1-11/16"	2-1/16"
Mounting Strip IM - HSB	1-1/8"	1-11/16"	2-1/8"
Deluxe Trim Frame	2-11/16"	1-11/16"	1-1/8"
Bullnose Z Frame	2"	1-11/16"	1-5/16"

Sill Cover Size Limitations

Minimum	A: 1/2"	B: 1-11/16"	C: 0"
Maximum	A: 12"	B: 3-15/16"	C: 2-1/4"

The sum of B & C cannot be more than 3-15/16"

When ordering a Decorative Sill Cover order forms must be filled out and emailed to cbgshutters@custombrandsgroup.com. Order forms can be found in the front section of the guide.

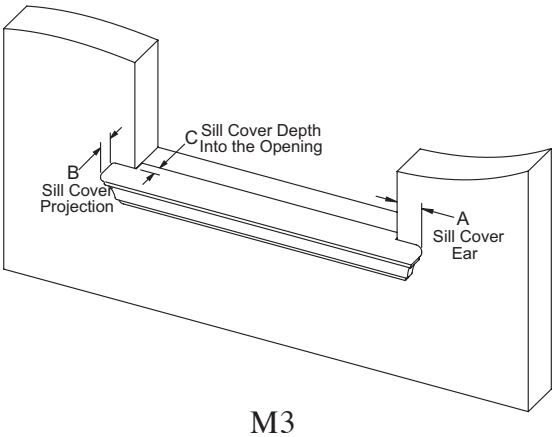

N

INSTALLATION

Installation Tools Required

- Rechargeable, variable speed 3/8” drill
- 3/8” diameter drill bit
- 3/32” drill bit
- 3” Robertson bits of #6 (green handle #1) and #8 (red handle #2) screwdrivers
- Pan-head full thread screws are provided
- Hinge shims (available if requested for no-frame applications only)
- Slot screwdriver
- Non-marring hammer with 1” head for tapping frames into position
- Jig saw, hack saw, Dremmel tool or X-acto knife if cut-outs are required
- Loctite Super Bonder® 414 Instant Adhesive or contact cement required for an outside mount L Frame
- Dap for mitered corners and gaps between the frames and window jambs

Inside Mount with No Frame

1. INSTALL TOP HINGE
   - Starting with the left panel(s), place panel into opening.
   - Position the panel so it has equal clearance at the top and bottom. Make a pencil mark under the top hinge.
   - Install one screw into the window jamb hinge that goes below the top hinge.
   - Check to see if the position is accurate by placing the panel into the opening. Insert the top hinge pin into the panel and jamb. If accurate, remove the panel and insert the second screw into the top hinge on the jamb.

2. INSTALL BOTTOM HINGE
   - Place the panel into position by inserting the top hinge pin into the panel and jamb hinge.
   - Mark the jamb where the bottom of the lowest hinge is on the panel.
   - Install one screw into the window jamb hinge that goes below the bottom hinge.
   - Check if position is accurate by installing the panel from the top and bottom hinges.
   - Shim using available hinge shims if necessary.

3. LEVEL PANELS
   - If more panels are to be installed, repeat the first two processes by lining up the panel as the main concern.
   - If minor support or leveling is required, turn adjustable jamb cap at the bottom of the vertical jamb to the required spot (if used).

4. INSTALL REMAINING HINGES
   - Once panels are level, install the remaining panel hinges while the panels are hanging. Simply open the panels, insert the hinge pin into the hinges and screw the hinges into the window jambs.
   - Shim using available hinge shims if necessary.

5. INSTALL"MAGNETS AND PLATES" OR "RAMPS"
   - See pages N3-N4.

Inside Mount (no frame flush with opening)

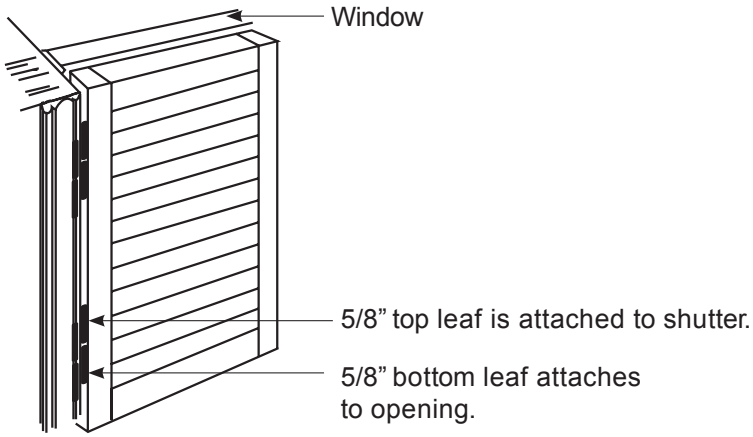

Inside Mount with Extended Leaf Hinge

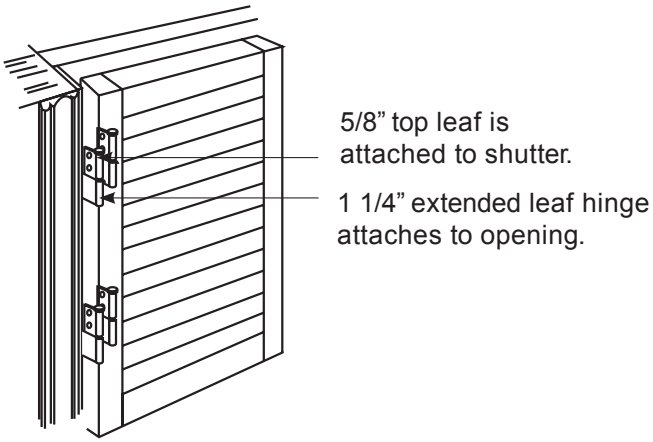

Note: The extra length allows for 5/8" maximum adjustment, thus minimizing required clearance.

Panel Lock Ramp Installation - Less Than 4-sided Frame Applications

Panel Lock Spring Loaded Plunger

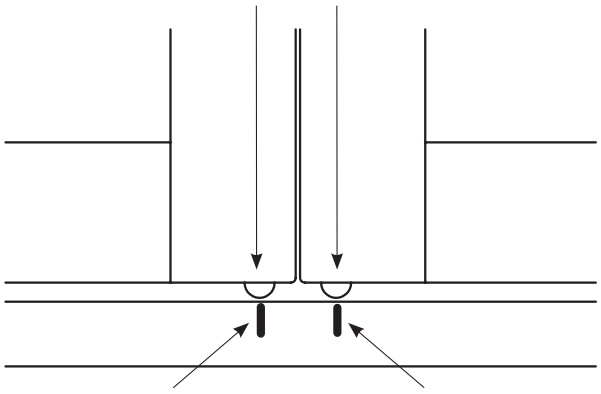

Mark center of each plunger with pencil

Panel Lock Ramps

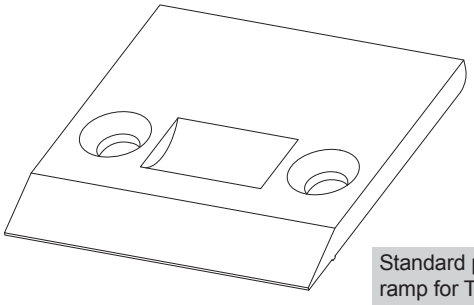

Standard panel lock ramp for T-Post

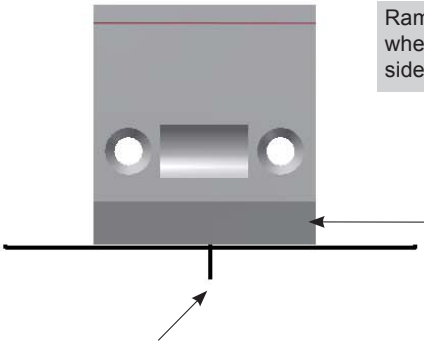

Ramps will be necessary when less than 4 frame sides are ordered.

Panel lock ramp

Center line of plunger

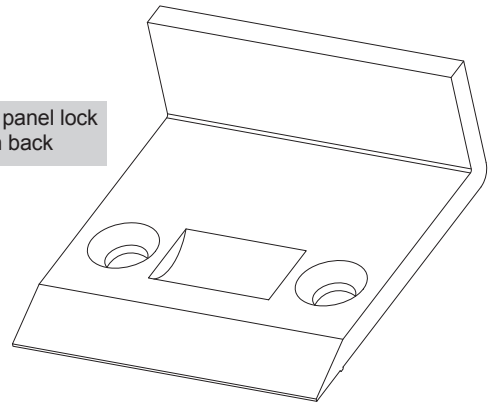

Standard panel lock ramp with back

PROCEDURE

1. The Panel Lock Cap Assembly will be installed during fabrication.
2. Once the shutter and panels have been installed, make a mark on the window sill with a pencil to show where the center of the Panel Lock Plunger is located, as well as the front of the ramp.
3. Open the panel(s).
4. Place the Panel Lock Ramp on the sill so that it aligns with the indicator lines.
5. Mark the center of each screw hole of each Ramp.
6. Remove the Ramps and drill a pilot hole for each screw using a 3/32” drill bit.
7. Place the Ramp back on the sill and set the screws. (Repeat as necessary)
8. Operate the panel(s) to ensure proper function and closure.
9. The Panel Lock Plunger can be adjusted by using a flat head screwdriver. Push in on the plunger and rotate clockwise to thread the plunger into the panel or rotate the plunger counterclockwise to extend the plunger.

Magnetic Catch Placement

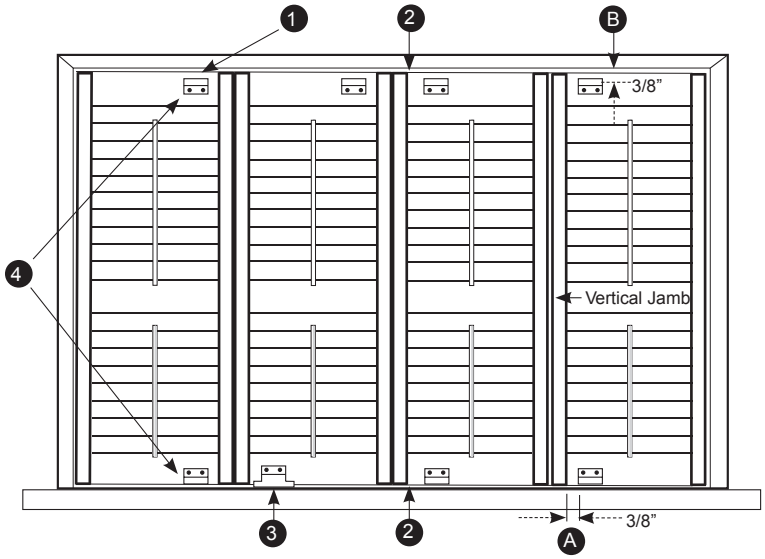

On framed applications, mount plate 3/8” from vertical jamb A, and 3/8” from end of panel on top rail B

On sill mount installations, mount plates flush with bottom of panel, and 3/8” from vertical jamb on bottom rail.

Note: All magnets and catches must be installed. Mount magnets on frames. When there is no frame, mount magnets on window sill or jamb. Receiver plate mounts on bottom and top cross rails. Magnets & Catches will not be used if the panel lock has been installed.

PROCEDURE

1. Install plate, as shown on drawing, with the holes towards the center of panel.
2. With panels closed, pencil mark the sill or frame where the vertical jamb meets the top or bottom rail.
3. Install magnet from the mark toward the inside of the panel.
4. Install two magnets and plates per panel.

Side View of Magnetic Catch Position

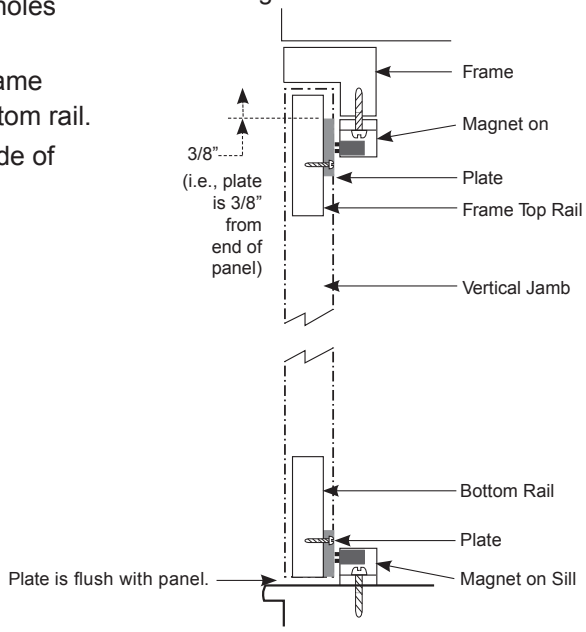

Catch Receiver Installation

2 SIDED FRAME (TOP & BOTTOM)

1. FRAME ASSEMBLY
   - Attach the two panel catches to the bottom frame as indicated by the pre-drilled indents..

2. FRAME & CATCH RECEIVER INSTALLATION
   - Partially set an installation screw into the bottom frame.
   - Set the bottom frame on the door as measured for and mark the position with a pencil.
   - Make sure the bottom frame is level and positioned left and right so the panel will not interfere with the door knob.
   - Attach the bottom frame.
   - Carefully set the panel on the bottom frame and locate the position of the top frame. Then mark this location and remove panel.
   - Attach the top frame making sure it is level and aligned properly with the bottom frame.
   - Install button plugs once all screws have been set.
   - Place the panel into position with the bottom of the panel jambs covering the panel catch.
   - Insert hinge pins through the top of the top frame into the top of the panel jamb

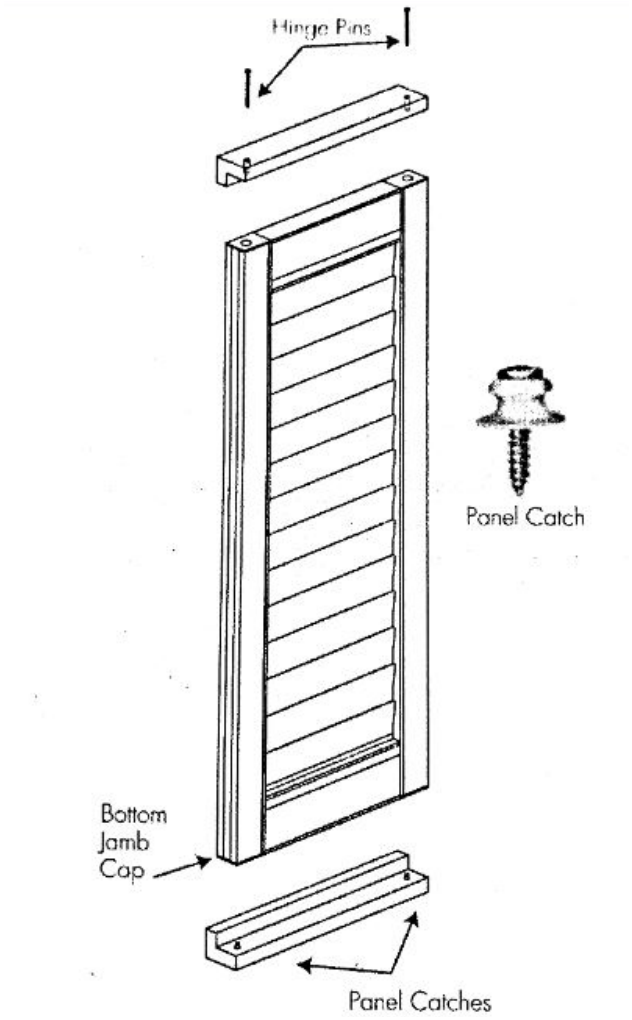

Frame Assembly for 3 or 4 sided Frames

BONDING (for L Frame outside mount and sill frame applications only)

- Apply Super Bonder® 414 (or Contact Cement) to outside surface of corner key.
- Slide frame over corner key. Hold firmly until it is set (10 to 20 seconds).

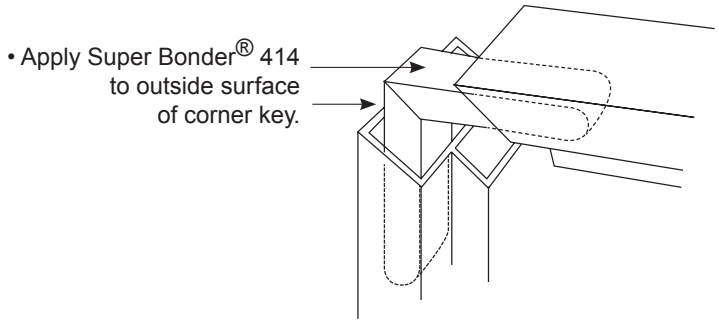

ASSEMBLY

- Lay side frames flat beside the panels, so that the panel hinges are above the frame hinges.
- Insert the plastic corner keys on the top and bottom frames first.
- Slide the top and bottom frames into the side frames (Use a small amount of Loctite only after it is determined that the frames match. It will be impossible to detach the corners after they have set.)
- If minor gaps appear, use Dap to seal the corners.
- For Casing Frames, S Frames, Trim Frames, Bullnose Z Frame and Deluxe Trim Frames, install a 90-degree metal bracket at the back of the frames for a tight, and more secure assembly. See diagrams below.
- If extensions are used:

  a) L Frame and S Frame Extension slides onto the back of the frame.

  b) Casing Frame Extension is screwed to the frame before installation.

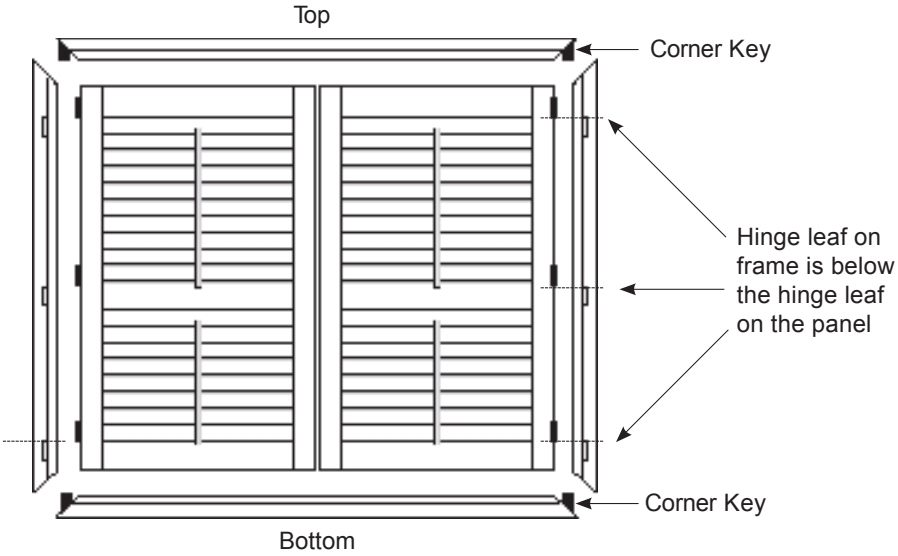

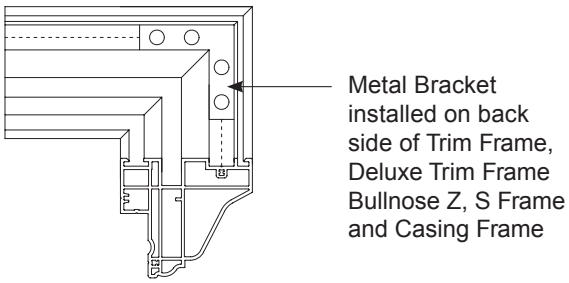

T-Posts

1. T-POSTS
   - T-Posts are used as a divider to hinge single or bi-fold panels when openings are too wide to hinge panels from the side. T-Posts can be placed directly in front of any existing window divider.

2. IF MOUNTING DIRECTLY TO THE WINDOW MULLIONS
   - Drill 3/8” holes through the first layer of Polyresin3 at the front face of the T-Post. Start approximately 2” from the top and drill hole approximately every 10-15 inches.
   - Secure the T-Post by screwing in the top and bottom holes.
   - Hang panels to the T-Post or hang panels side-by-side against T-Post to ensure even sight lines and all is level.
   - Screw in the remainder of the holes.
   - Cap with button plugs.

3. IF MOUNTING USING L-BRACKETS
   - Attach L-Brackets to the T-Posts. Ensure that brackets are placed at the back side of the T-Post so that the bracket screw goes through the screw post in the T-Post. The stop hole is positioned at the top left and bottom right side.
   - Screw brackets into position on top right and bottom left side, centering the screw into the L-Bracket. This will allow some play for leveling purposes.
   - Hang panels and adjust T-Post positioning until sight lines and leveling is achieved.
   - Lock T-Post into position by setting screws through the stop holes in the L-Bracket.

4. IF MOUNTING USING ALIGNMENT BLOCKS
   - Stack two T-Post Alignment Blocks.
   - Position on the frame so that the holes in the blocks are lined up with the pre-drilled holes in the bottom frame.
   - Using #6 x 1 3/4” screws, attach the blocks to the frame.
   - Repeat for the top frame.
   - Assemble frame.
   - After the frame is installed and the position of the T-Post is determined, set a #8 x 1 1/2” installation screw horizontally through the pre-drilled hole in the side of the T-Post at the bottom.
   - Repeat the above step and cover holes with button plugs.
   - See pages N8 and N9 for additional details.

T - Post Bracket

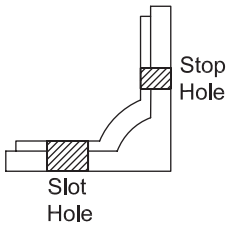

T - Post Alignment Block

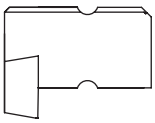

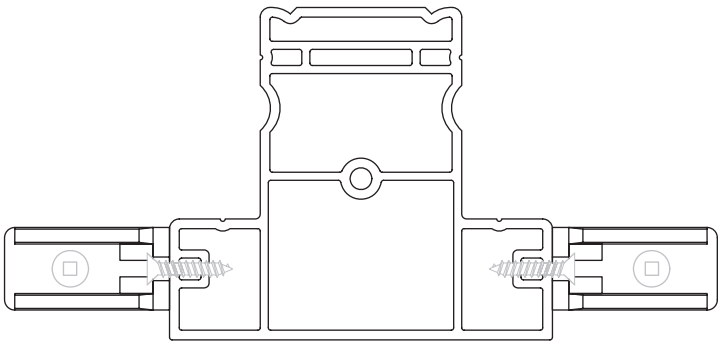

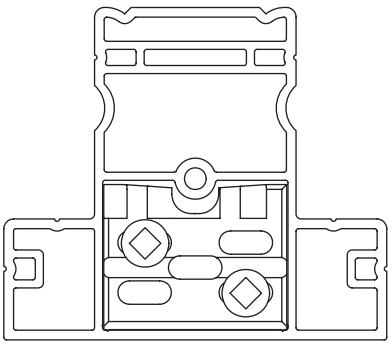

T-Post Installation
T-Post Alignment Block with 3-sided Frame Mounting on Window Sill

1. ATTACH T-POST BLOCKS TO FRAME
   - Stack two T-Post Alignment Blocks, both with the tabs facing down. (See page N9)
   - Lay out the top frame so that the light block is facing up.
   - Two holes have been pre-drilled diagonally in the face of the top frame at each T-Post location.
   - Position the stacked blocks on the light block portion of the frame so that the holes in the block align with the pre-drilled holes in the frame. (The tabs will hang off the edge of the light block.)
   - Using (2) #6 x 1 3/4" T-Post block screws, attach the blocks to the frame. Do not completely tighten the screws down, only make them snug. This will allow some side to side adjustment of the T-Post.

2. ASSEMBLE FRAME AND T-POST
   - Insert the corner keys into the top frame.
   - Attach the left side frame to the top frame.
   - Attach the right side frame to the top frame.
   - Attach T-Post to the top frame by sliding the T-Post over the blocks on the top frame.
   - If aluminum reinforcement was requested for the T-Post, make sure it is positioned properly within the T-Post.

3. BEGIN INSTALLING THE SHUTTER
   - Begin by installing the shutter as a standard 3-sided frame but install only the top screw on each side frame and one bottom screw if necessary.
   - Test the fit and position of the panels to determine the location of the T-Post.
   - Mark the front and center of the T-Post with a pencil on the sill.
   - Mark the back of the T-Post with a pencil on the sill.
   - Remove the panels and the frame.
   - Stack two T-Post Alignment Blocks, one with the tab facing up and one with the tab facing down. (as pictured below)
   - Attach two stacked T-Post blocks to the sill so that the back of the "trough" of the block is 1 1/4" from the front center mark of the T-Post.
   - Use (2) #6 x 1 3/4" T-Post Block Screws to attach the blocks to the sill. Do not fully tighten the screws - they should only be snug.
   - Set the assembled frame back in the opening making sure the bottom of the T-Post slides over the blocks on the sill.
   - Finish installing the frame and then hang the panels.

4. ALIGN T-POST AND SECURE
   - Determine the side to side position of the T-Post, then drive a #8 x 1 1/2" installation screw horizontally through the hole in the end of the T-Post.
   - The screw will then pass between the (2) T-Post Blocks, thus locking the T-Post into position.
   - Repeat for the top of the T-Post and cap installation holes with button covers.

Mark T Post & Block location on window sill

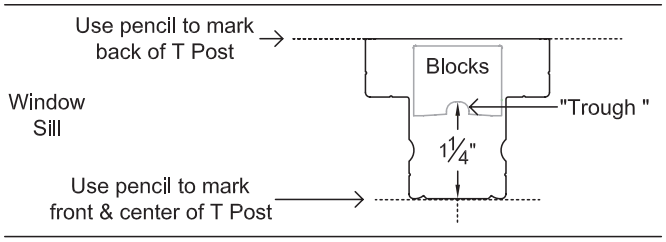

Attach T Post Blocks to Sill

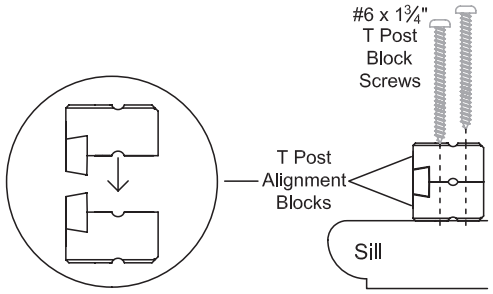

Position T Post

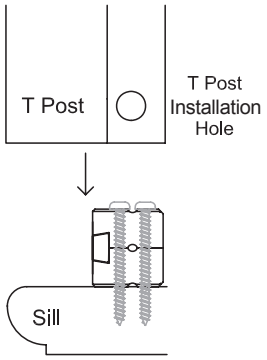

Align T Post and Secure

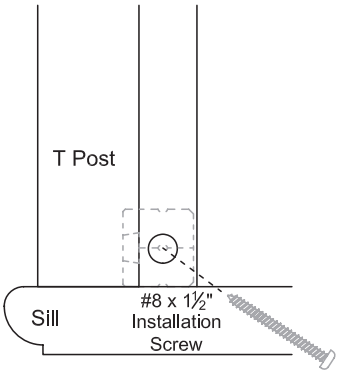

T-Post Installation
T-Post Alignment Block with 4-sided Frame

1. ATTACH T-POST BLOCKS TO FRAME
   - Stack two T-Post Alignment Blocks, both with the tabs facing down.
   - Lay out the bottom frame so the light block is facing up.
   - Two holes have been pre-drilled diagonally in the face of the bottom frame at each T-Post location.
   - Position the stacked blocks on the light block portion of the frame so that the holes in the block align with the pre-drilled holes in the frame. (The tabs will hang off the edge of the light block.)
   - Using (2) #6 x 1 3/4” T-Post block screws, attach the blocks to the frame. Do not completely tighten the screws down, only make them snug. This will allow some side to side adjustment of the T-Post.
   - Repeat the above steps for the top frame.

2. ASSEMBLE FRAME AND T-POST
   - Insert the corner keys into the bottom frame.
   - Attach the left side frame to the bottom frame.
   - Attach the right side frame to the bottom frame.
   - Attach T-Post to the bottom frame by sliding the T-Post over the blocks on the bottom frame.
   - If aluminum reinforcement was requested for the T-Post, make sure it is positioned properly within the T-Post.
   - Attach the top frame. Make sure the corner keys in each end of the top frame align with the corner key cavities in the side frames. At the same time make sure the T-Post is positioned on the blocks attached to the top frame.

3. INSTALL THE SHUTTER
   - Follow standard instructions for installing the frame.
   - Test the fit and position of the panels to determine the location of the T-Post.
   - Mark the position of the T-Post on the frame with a pencil.
   - Remove the panels.

4. ALIGN T-POST AND SECURE
   - With the bottom of the T-Post in the desired position, drive a #8 x 1 1/2” installation screw horizontally through the hole in the end of the T-Post.
   - The screw will then pass between the (2) T-Post Blocks, thus locking the T-Post into position.
   - Repeat for the top of the T-Post and cap installation holes with button covers.

Attach T Post Blocks to Frame

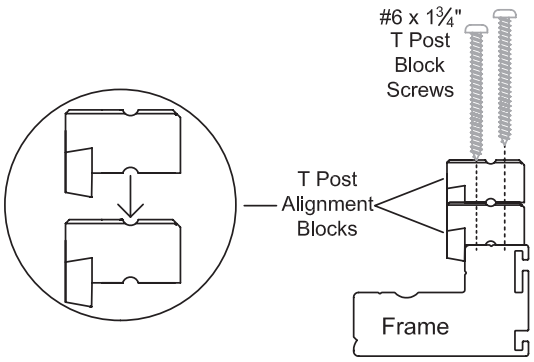

Position T Post

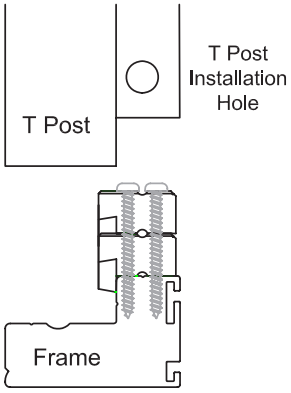

Align T Post and Secure

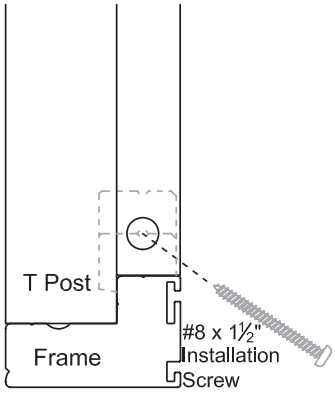

Inside Mount with L Frame

1. ASSEMBLE FRAMES
   - See page N6.

2. PLACE FRAME IN OPENING
   - The top part of the frame is indicated by a greater amount of distance from the top of the top hinge to the edge of the frame. The label will indicate left and right side.

3. FASTEN FRAME
   - Most frames have pre-drilled holes placed for ease of installation.
   - Insert a screw in both the left and right top side frame holes. Center the frame in the opening, then drill the screws into the jambs. If the screw is not in enough, the opening will be smaller than ordered. If the screw is in too far, the opening will be larger than ordered.

4. HANG PANELS
   - With upper and lower hinge pins only.

5. SQUARE/LEVEL PANELS TO THE OPENING
   - Move bottom frame left or right until the panels are level. If this does not work, then:
   - Move left frame up or down until the panels are level. If this does not work, then:
   - Move right frame up or down until the panels are level.
   - When the panels are level within the frame, hold bottom frame in position and place a crew in the middle bottom frame hole.

6. FASTEN REMAINING SCREWS
   - Insert screws in the remaining holes and check to ensure panels are level after every screw has been drilled into position.

7. INSTALL “MAGNETS AND PLATES” OR “RAMPS” (if applicable)
   - See pages N3-N4 for instructions.

8. CAP INSTALLATION HOLES
   - Once all screws have been installed and panels checked for levelness, cap all holes with the provided button plugs.

9. CLOSE ANY GAPS
   - With either L Frame Cover Strip, which is glued to the front face of the frame, or with Dap.

Fastening

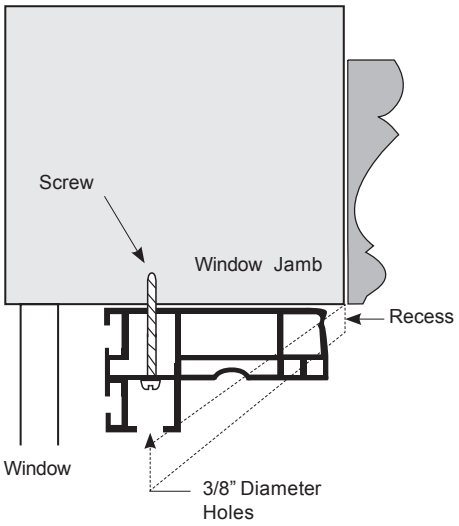

Squareness Adjustments

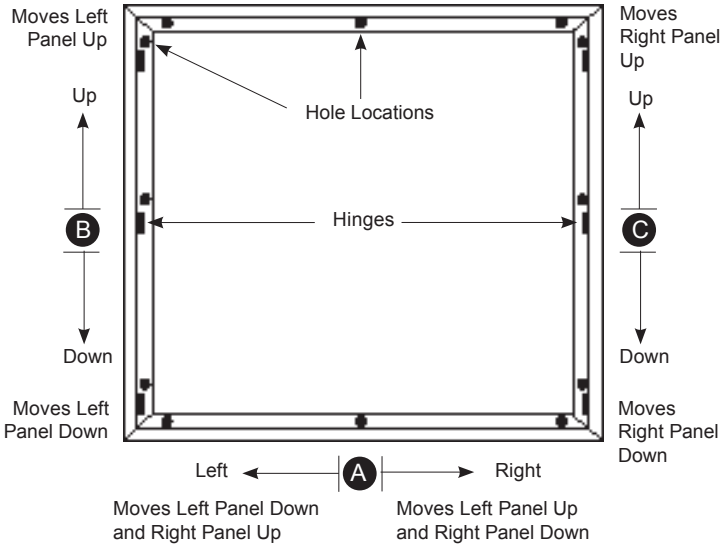

Inside Mount with Z, Bullnose Z, Trim, or Deluxe Trim Frames

1. ASSEMBLE FRAMES
   - See page N6.

2. PLACE FRAME IN OPENING
   - The top part of the frame is indicated by a greater amount of distance from the top of the top hinge to the edge of the frame. The label will indicate left and right side.

3. FASTEN FRAME
   - Most frames have pre-drilled holes placed for ease of installation.
   - Insert a screw in both the left and right top side frame holes. Center the frame in the opening, then drill the screws into the jambs. If the screw is not in enough, the opening will be smaller than ordered. If the screw is in too far, the opening will be larger than ordered.

4. HANG PANELS
   - With upper and lower hinge pins only.

5. SQUARE/LEVEL PANELS TO THE OPENING
   - Move bottom frame left or right until the panels are level (A). If this does not work, then:
   - Move left frame up or down until the panels are level (B). If this does not work, then:
   - Move right frame up or down until the panels are level (C).
   - When the panels are level within the frame, hold bottom frame in position and place a screw in the middle bottom frame hole.

6. FASTEN REMAINING SCREWS
   - Insert screws in the remaining holes and check to ensure panels are level after every screw has been drilled into position.

7. INSTALL MAGNETS AND PLATES OR RAMPS (if applicable)
   - See pages N3-N4 for instructions..

8. CAP INSTALLATION HOLES
   - Once all screws have been installed and panels checked for levelness, cap all holes with the provided button plugs.

9. CLOSE ANY GAPS
   - For gaps that may occur at frame corners or around frame, apply Dap as needed.

Squareness Adjustments

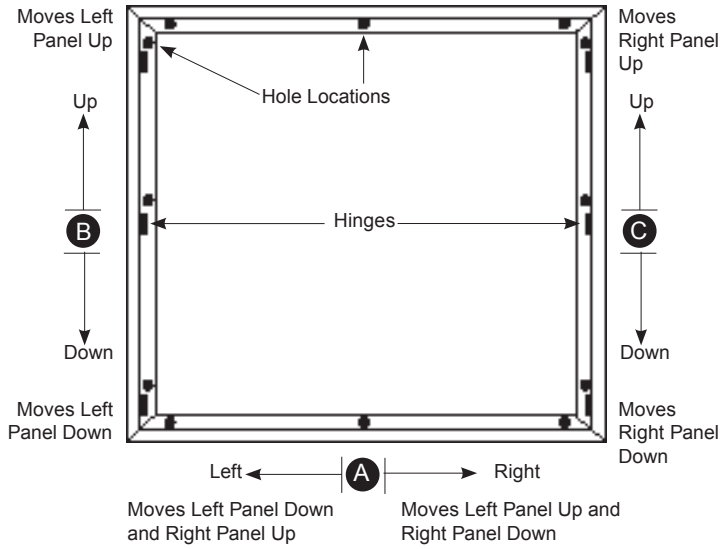

Fastening

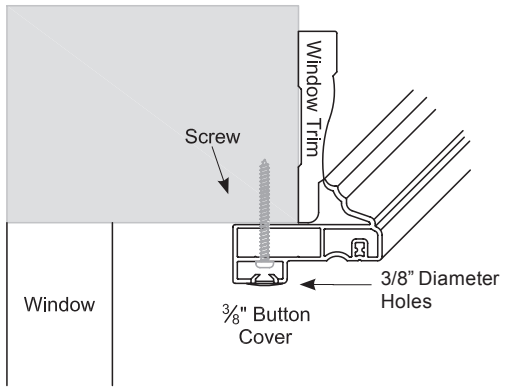

Inside Mount and Outside Mount with Mounting Strip

1. DRILL INSTALLATION HOLES
   - 3/8” diameter holes must be drilled at each hinge.

2. PLACE SIDE FRAME IN OPENING
   - The top part of the frame is indicated by a greater amount of distance from the top of the top hinge to the edge of the frame. The label will indicate left and right side.

3. FASTEN SIDE FRAME
   - Insert a screw inside the top holes first, followed by the bottom ones, keeping the panels plumb.

4. HANG PANELS
   - With upper and lower hinge pins only.

5. SQUARE/LEVEL PANELS TO THE OPENING
   - Adjust the bent-leaf hinges, if necessary, by loosening the hinge screws and moving the hinge left or right.
   - Re-tighten hinge screws once level.

6. FASTEN REMAINING SCREWS
   - Insert screws in the remaining holes and check to ensure panels are level after every screw has been screwed into position.

7. FASTEN TOP AND BOTTOM FRAME
   - Drill 3/8” hole.
   - Center and insert screws.

8. CAP INSTALLATION HOLES
   - Once all screws have been installed and panels checked for levelness, cap all holes with the provided button plugs.

9. INSTALL MAGNETS AND PLATES
   - See page N4 for instructions.

Outside Mount

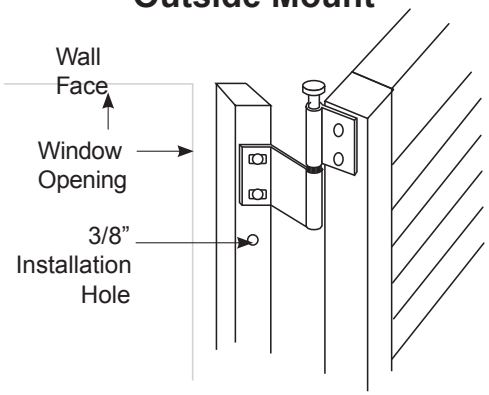

Inside Mount

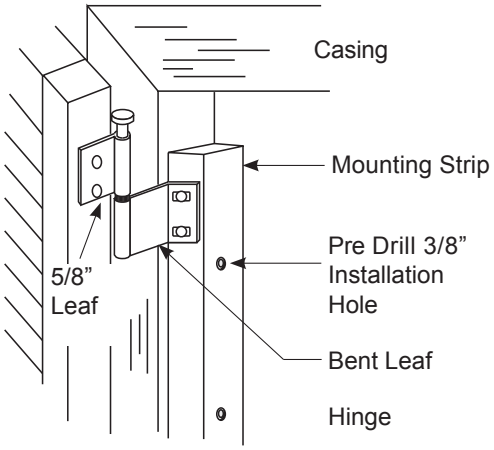

Outside Mount with Casing Frame or S Frame

1. ASSEMBLE FRAMES
   - See page N6.

2. HOLD FRAME ON OPENING
   - The top part of the frame is indicated by a greater amount of distance from the top of the top hinge to the edge of the frame. The label will indicate left and right side.

3. FASTEN FRAME
   - Most frames have pre-drilled holes placed for ease of installation.
   - Insert a screw in both the left and right top side frame holes as level as possible.

4. HANG PANELS
   - With upper and lower hinge pins only.

5. SQUARE/LEVEL PANELS TO THE OPENING
   - Move bottom frame left or right until the panels are level (A). If this does not work, then:
   - Move left frame up or down until the panels are level (B). If this does not work, then:
   - Move right frame up or down until the panels are level(C).
   - When the panels are level within the frame, hold bottom frame in position and place a screw in the middle bottom frame hole.

6. FASTEN REMAINING SCREWS
   - Insert screws in the remaining holes and check to ensure panels are level after every screw has been screwed into position.

7. INSTALL MAGNETS AND PLATES OR RAMPS (if applicable)
   - See page N3 and N4 for instructions.

8. CAP INSTALLATION HOLES
   - Once all screws have been installed and panels checked for levelness, cap all holes with the provided button plugs.

9. CLOSE ANY GAPS
   - For gaps that may occur at frame corners or around frame, apply Dap as needed.

Fastening

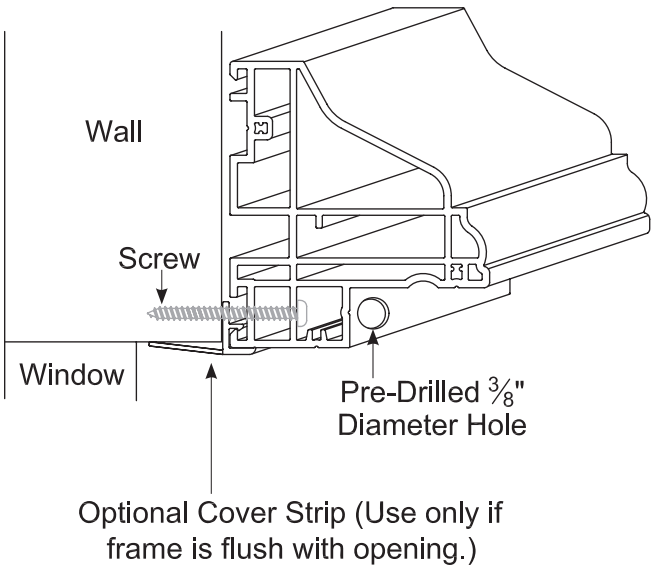

Squareness Adjustments

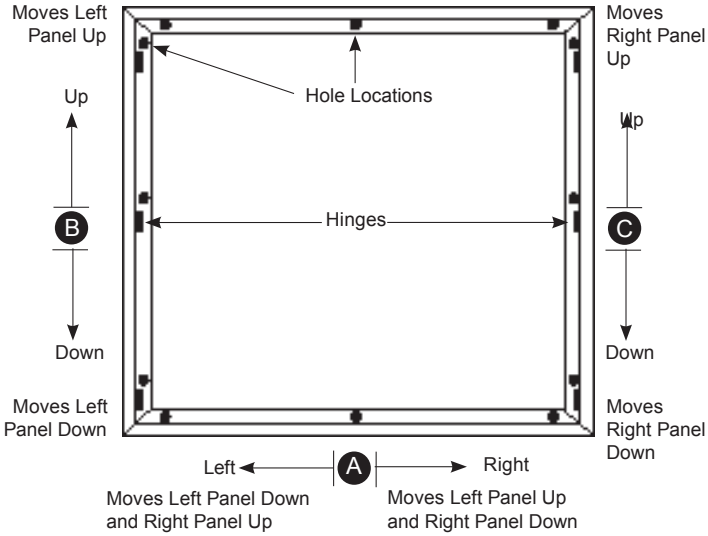

Outside Mount with L Frame

1. ASSEMBLE FRAMES
   - See page N6.
   - Corner key for outside mount L Frames must be glued in place.

2. HOLD FRAME ON OPENING
   - The top part of the frame is indicated by a greater amount of distance from the top of the top hinge to the edge of the frame. The label will indicate left and right side.

3. FASTEN FRAME
   - Most frames have pre-drilled holes placed for ease of installation
   - Insert a screw in both the left and right top side frame holes as level as possible.

4. HANG PANELS
   - With upper and lower hinge pins only.

5. SQUARE/LEVEL PANELS TO THE OPENING
   - Move bottom frame left or right until the panels are level (A). If this does not work, then:
   - Move left frame up or down until the panels are level (B). If this does not work, then:
   - Move right frame up or down until the panels are level (C).
   - When the panels are level within the frame, hold bottom frame in position and place a screw in the middle bottom frame hole.

6. FASTEN REMAINING SCREWS
   - Insert screws in the remaining holes and check to ensure panels are level after every screw has been screwed into position.

7. INSTALL MAGNETS AND PLATES OR RAMPS (if applicable)
   - See pages N3-N4 for instructions.

8. CAP INSTALLATION HOLES
   - Once all screws have been installed and panels checked for levelness, cap all holes with the provided button plugs.

9. CLOSE ANY GAPS
   - For gaps that may occur at frame corners or around frame, apply Dap as needed.

Squareness Adjustments

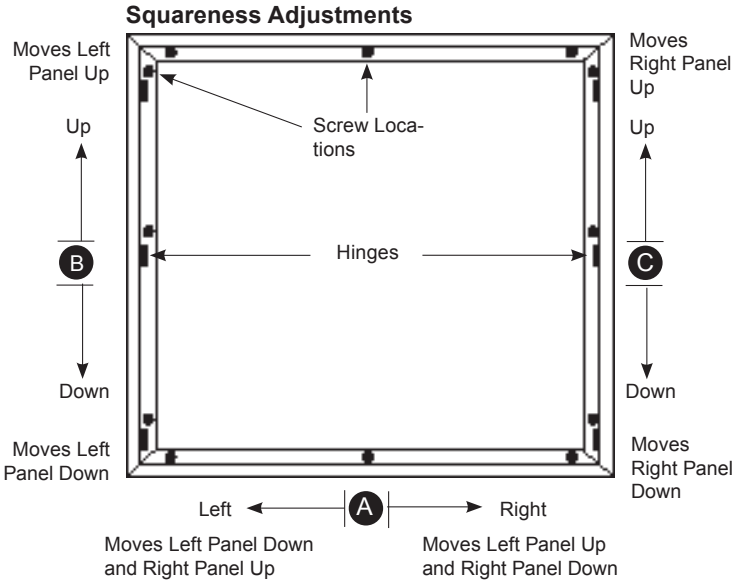

Fastening

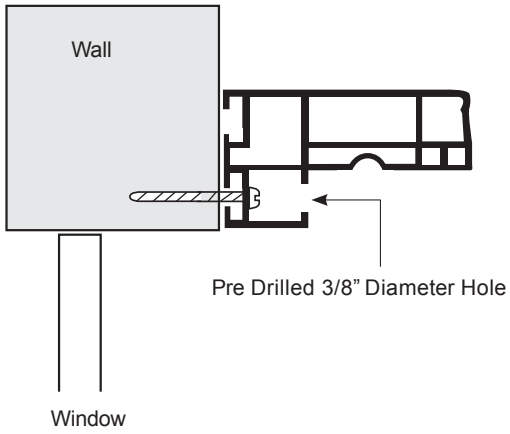

Bay Window Compound Miter

1. DRILL INSTALLATION HOLES
   - 3/8” diameter holes must be drilled at each hinge for the side frames.
   - Two 3/8” diameter holes must be drilled for each panel in both top and bottom frames. Each hole should be approximately 4” from each side of panel location.
   - For an inside mount, the holes are drilled at the side of the frame at the hinge.
   - For an outside mount, the holes are drilled at the front face of the frame just below the hinge.

2. ASSEMBLE FRAMES AND T-POSTS (if required)
   - See page N6 for 90-degree corners.
   - Insert kidney key inside the frame at each interior angle. For a Z-Frame or L Frame, screw a hinge screw into the frame through the kidney key for strength. For a Casing Frame, S Frame, Trim Frame, and Deluxe Trim Frame screw the metal strapping to the back of the frame.
   - See page N7 for T-Post positioning (ensure T-Post is perpendicular to the front).

3. HOLD FRAME IN OPENING
   - The top part of the frame is indicated by having a greater amount of distance from the top of the top hinge to the edge of the frame. The label will indicate left and right side.

4. FASTEN CENTER FRAME
   - Insert a screw in both the left and right top side frame holes in the center opening as level as possible.

5. HANG CENTER PANELS
   - With upper and lower hinge pins only.

6. SQUARE/LEVEL PANELS TO THE OPENING
   - Move bottom frame left or right until the panels are level. If this does not work, then:
   - Move left frame up or down until the panels are level. If this does not work, then:
   - Move right frame up or down until the panels are level.
   - When the panels are level within the frame, hold bottom frame in position and place a screw in the middle bottom frame hole.

7. HANG OUTER PANELS
   - With upper and lower hinge pins only.

8. SQUARE OR LEVEL LEFT PANEL TO THE CENTER OPENING (repeat for right)
   - Move the left frame up or down until the panels are level.
   - When the panels are level within the frame, hold the bottom frame in position and place a screw in the middle bottom frame hole.
   - If minor support or leveling is required, turn the adjustable plunger (of the panel lock) at the bottom of the vertical jamb to the required spot.

9. INSTALL MAGNETS AND PLATES (if applicable)
   - In situations in which panel lock cannot be used, apply magnets and catches.
   - See pages N3-N4 for instructions.

10. CAP INSTALLATION HOLES
    - Once all the screws have been installed and panels checked for level, cap all the holes with the provided plugs

11. CLOSE ANY GAPS
    - For gaps that may occur at frame corners or around the frame, apply Dap as needed.

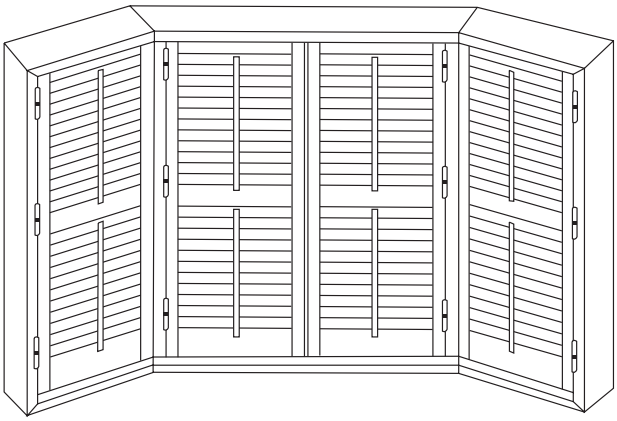

Bay Window Compound Miter

1. DRILL INSTALLATION HOLES
   - 3/8” diameter holes must be drilled at each hinge for the side frames.
   - Two 3/8” diameter holes must be drilled for each panel at both top and bottom frames. Each hole should be approximately 4” from each side of panel location.
   - For an inside mount, the holes are drilled at the side of the frame at the hinge.
   - For an outside mount, the holes are drilled at the front face of the frame just below the hinge.

2. ASSEMBLE FRAMES AND T-POSTS (if required)
   - See page N6 for 90-degree corners.
   - Insert kidney key inside the frame at each interior angle. For a Z-Frame or L Frame, screw a hinge screw into the frame through the kidney key for strength. For a Casing Frame, S Frame, Trim Frame, and Deluxe Trim Frame, screw the metal strapping to the back of the frame.
   - See page N7 for T-Post positioning (ensure T-Post is perpendicular to the front).

3. HOLD FRAME IN OPENING
   - The top part of the frame is indicated by having a greater amount of distance from the top of the top hinge to the edge of the frame. The label will indicate left and right side.

4. FASTEN CENTER FRAME
   - Insert a screw in both the left and right top side frame holes in the center opening as level as possible.

5. HANG CENTER PANELS
   - With upper and lower hinge pins only.

6. SQUARE/LEVEL PANELS TO THE OPENING
   - Move bottom frame left or right until the panels are level. If this does not work, then:
   - Move left frame up or down until the panels are level. If this does not work, then:
   - Move right frame up or down until the panels are level.
   - When the panels are level within the frame, hold bottom frame in position and place a screw in the middle bottom frame hole.

7. HANG OUTER PANELS
   - With upper and lower hinge pins only.

8. SQUARE OR LEVEL LEFT PANEL TO THE CENTER OPENING (repeat for right)
   - Move the left frame up or down until the panels are level.
   - When the panels are level within the frame, hold the bottom frame in position and place a screw in the middle bottom frame hole.
   - If minor support or leveling is required, turn the adjustable plunger (of the panel lock) at the bottom of the vertical jamb to the required spot.

9. INSTALL MAGNETS AND PLATES (if applicable)
   - In situations in which panel lock cannot be used, apply magnets and catches.
   - See pages N3-N4 for instructions.

10. CAP INSTALLATION HOLES
    - Once all the screws have been installed and panels checked for level, cap all the holes with the provided plugs

11. CLOSE ANY GAPS
    - For gaps that may occur at frame corners or around the frame, apply Dap as needed.

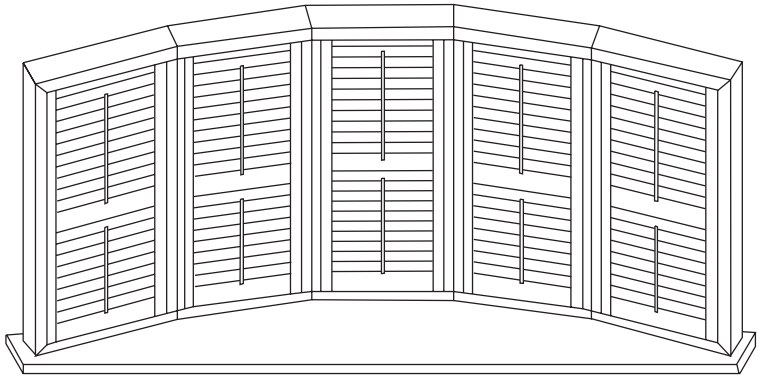

GENERAL INFORMATION AND TROUBLESHOOTING

General Information

Troubleshooting

Shutter Panel Parts Diagram

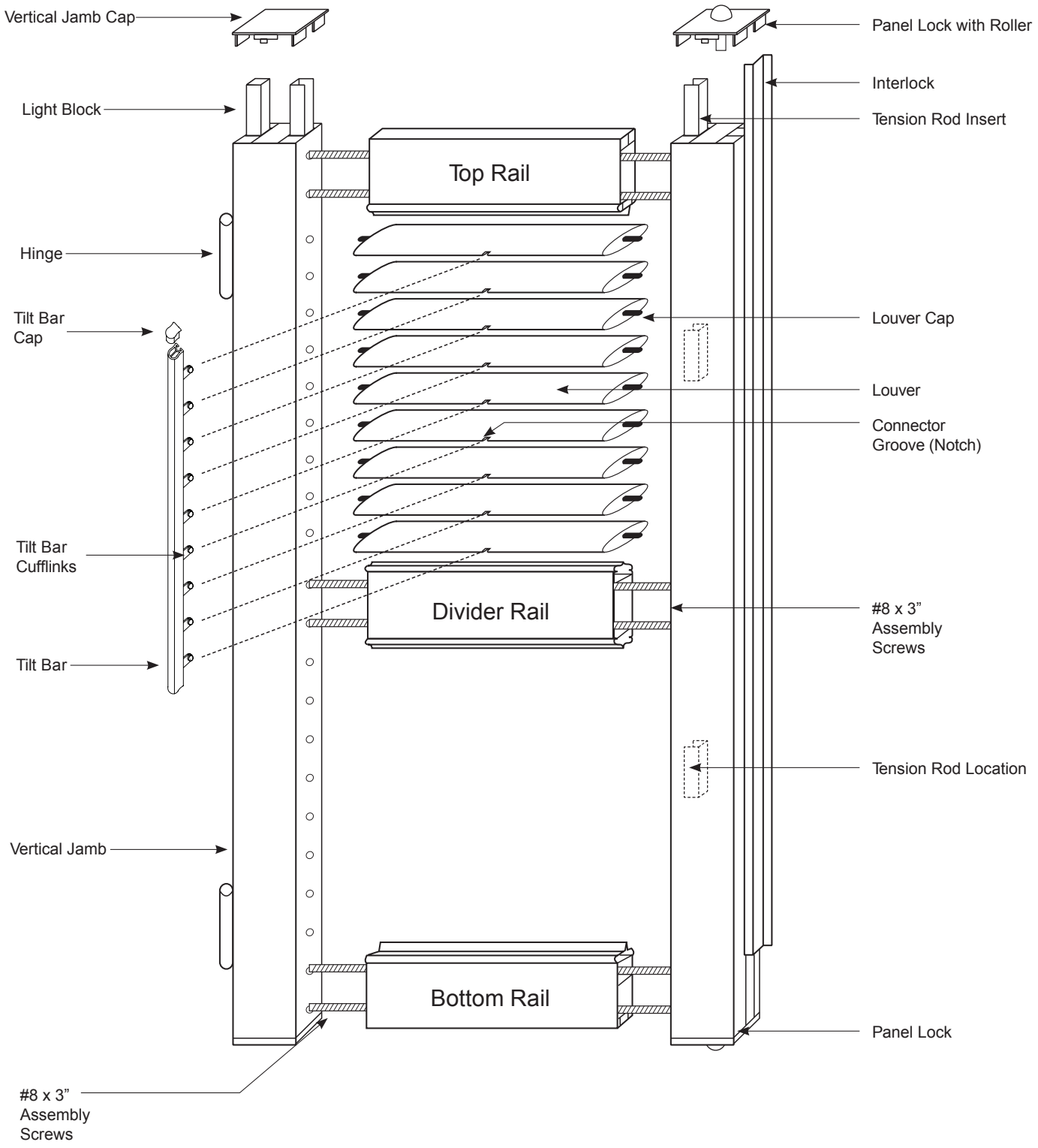

Two Part Hinges

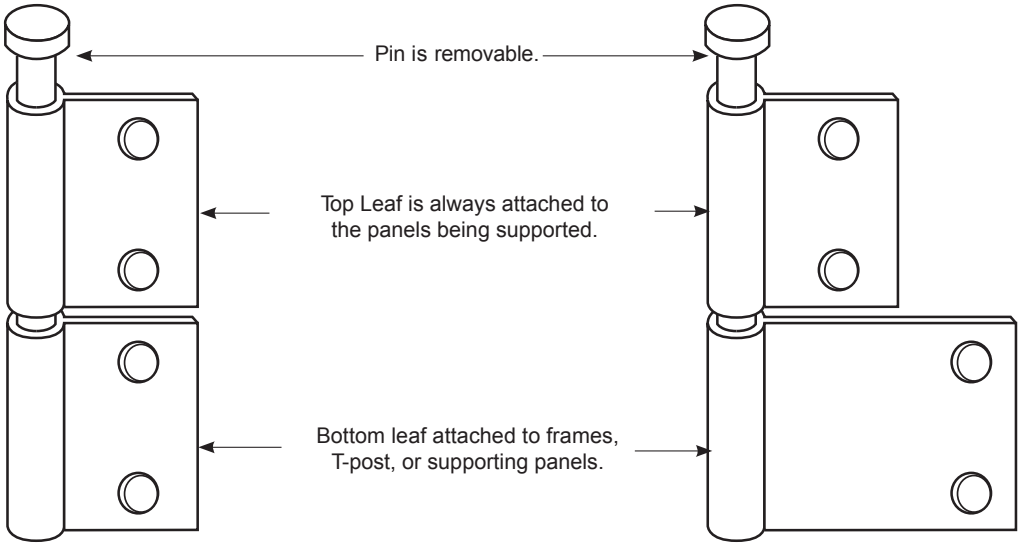

5/8" Hinge Leaf Set
(used on panels and frames)

1 1/4 " Extended Hinge Leaf Set
(used only to install panels without frame to provide depth adjustment)

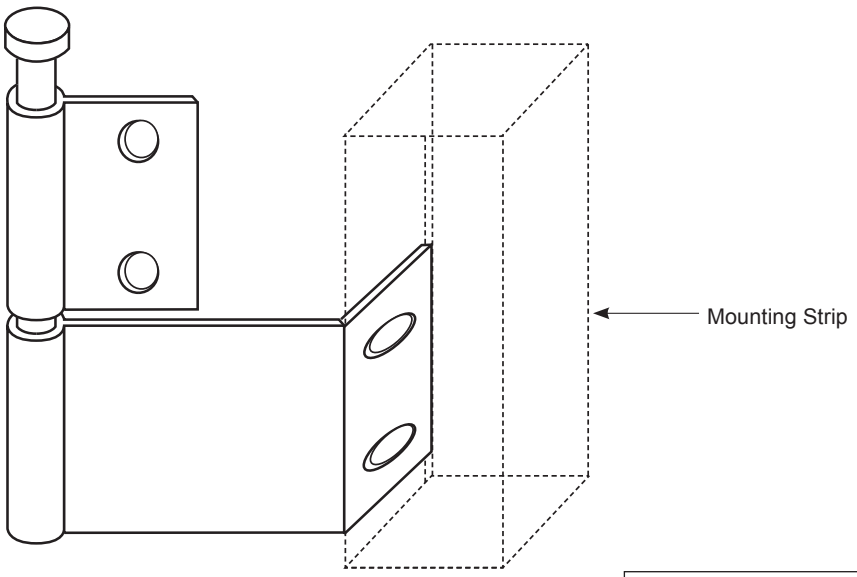

Bent Leaf Hinge Set
(used for inside and outside mount with 3/4" or 1" mounting strip)

Hinge Quantity Per Panel Based on Panel Height

0-28"	2
To 50"	3
To 72"	4
To 94"	5
To 120"	6

Available colors: Cotton, Pearl, Brass, and Stainless Steel.

Note: All panels, frames and T-Posts are pre-hinged. On inside mounts without frames, the bottom hinge leaf must be installed.

Panels won't stay closed!

Check panel lock.
Check to ensure that the panel lock plunger is seated properly in the panel lock ramp. Typical situations that could prevent this from seating properly are:

1. The panel lock plunger is too far inside the panel. Open the panel to access the panel lock plunger located at either end of the panel. Using a #2 square drive screwdriver, push in on the plunger, then rotate 1/2 turn. Release the plunger, close panel and check closure. Repeat until panel closes properly.
2. The plunger does not sit in the "dip" in the ramp. Using a pencil, mark the center of the plunger on the frame. Open the panel to access the ramp. Remove screws and relocate ramp by aligning the center of the ramp with the mark on the frame. The back of the ramp will sit against the light block portion of the frame. Note: Previous screw holes may need to be capped or filled with Dap.
3. Check plunger and jamb cap alignment. The plunger is designed to lock into grooves on the jamb cap to prevent unwanted rotation. If they are not aligned, the plunger will sit inside the cap. To adjust, open the panel to access the panel lock plunger. Using a #2 square drive screwdriver, rotate the plunger until the plunger and cap are in proper alignment. The plunger should now extend beyond the panel and make contact with the ramp.

Check the number of magnets. (if applicable)
To maximize the closure of the panels, two magnets should be placed on each panel. There are situations that only one magnet is used – Patio Doors or Café Style applications. Refer to the magnet installation Section N in the manual for proper placement of magnets. A Bi-fold also uses two magnets per panel. Always ensure that the magnet plates are positioned on the horizontal rail opposite the hinge side.

Check magnet contact. (if applicable)
Check to ensure the magnet and magnet plate have full contact with each other. Typical situations that could prevent the full contact from occurring are:

1. Magnet and magnet plate are installed with only partial contact with each other. The magnet or magnet plate may have to be moved left or right to ensure better contact or the magnet plate may have to be raised on the panel if only half of the magnet is in contact with the magnet plate.
2. Magnet has been installed on a slight angle with only one side of the magnet touching the magnet plate. Each magnet has a slot to allow each magnet side to be moved slightly forward or backwards. Loosen one of the screws on the magnet to allow the magnet to be straightened to allow for proper contact with magnet plate.
3. Magnet plate has been installed too high on the panel causing the magnet to contact the magnet plate installation screw. Take out magnet plate screws and install the plate lower on the panel. It is important to remove the excess Polyresin3® around the screw holes with an Xacto knife. If excess Polyresin3® is not removed, it will not allow the plate to be installed flat on the panel.
4. Magnet plate is not flush with panel which is preventing full contact. See above for situations where the magnet plate has already been moved. For installations without frame, if the magnet plate with the rubber shim has been over tightened, the plate may sit on an angle. Loosen the magnet plate screw slightly to allow the magnet plate to eliminate the angle.

Panels won't stay closed!

Check panel load.
Load is created when the installation of a panel is not plumb. If installed out of plumb, there is pressure put on the vertical jamb, which forces the door to open with a spring back effect. If the load is excessive, there is a possibility the louvers will be difficult to close. Adjusting the load can be resolved by one of the following ways:

1. If load is detected with no frame, then shims will be required to plumb the panel installation. Start by focusing on the top and bottom hinge only. Remove all other hinge pins. Shim the top or the bottom hinge on the window jamb until the panel closes without springing back and the louvers operate without resistance. Then concentrate on shimming one hinge at a time testing for spring back and louver operation.
2. If load is detected with frame applications, then adjustments are done by tightening or loosening the installation screws on the frame. Do not use shims. Start by removing all the installation screws except for the top. Re-install the bottom installation screw until there is no load. Continue with all other installation screws, one at a time, while checking for load.
3. If there is load on a Bi-fold panel, deal with the first hinge panel only, then attach the Bi-fold panel after the panel is installed properly.

Check for obstructions.
If something is stopping the panel from closing, it is called an obstruction. Please check for the following possible obstructions:

1. Window cranks are usually located on the bottom sill. If panel is hitting the crank, there are a number of possible solutions. Take the crank off the rotator and see if the panel is still obstructed. A small hole in the bottom rail may be cut out so that the small head of the crank will fit inside the panel rail. For panels without frame, an extension hinge may be used to bring the panel into the room an extra 5/8". For panels with frame, a build out may be required behind the frame.
2. Window locks are usually located on the vertical sides of the window to lock the window. If the lock is in the way of the panel, extend the panel into the room as discussed in the above situation.
3. Patio door handles typically create obstruction with louvers opening. If they stop the panels from closing, the product needs to be built out.
4. Bowed jambs or sills may stop a panel from closing, if the narrowest measurement was not taken in the first place. Double check inside measurements versus the measurements ordered and received to ensure the proper application.

Check for a twisted panel.
There are times when the panel is received twisted. This can occur when something was leaned against or put on top of the panel prior to installation. It can also occur if panels have been stored in an extremely hot location. An advantage of Polyresin3® is that it allows a simple tweaking procedure to put the panel back to its original state. To tweak a panel, place a support hand in the middle of the outside jamb of the panel. Take your other hand and place it on either the top or bottom of the panel. Apply pressure to either the top or bottom (like bending it back into position) until the panel stays closed.

Panels are too tight!

Ensure the panel width is correct.
If a panel is made or ordered too wide then it can be cut down to fit. To determine a manufacturing or ordering error, check the measurement of the panel versus the measurement on the label. If the label measurements are correct then measure the inside width of the opening in three locations to verify minimum opening width was ordered.

Ensure the frame width is correct.
If the frame is manufactured too small, the panels will be too tight. To find out if the frames are narrow, measure the back installation part of the frame. To determine if the deduction was correct, check with the fabrication site for specific deductions.

Ensure the frame is installed properly.
When a frame is installed as an inside mount, the installation screws initially draw the shutter frame into the opening. As the screwhead makes contact inside the frame, it will then begin to draw the shutter frame towards the window frame . To check if the installation screw has been drilled in enough, simply measure the top or bottom width and compare it to the width where the panel looks to be too wide. If the frames are not assembled correctly, they may cause the inside opening of the frame to seem too narrow hence making the panels too tight.

Is panel installed in the correct opening?
When a number of windows are of similar width, panels can be placed into the wrong opening or with the incorrect panel grouping. Check the labels to ensure they correspond with the opening, as well as the instructions given by the Order Form.

Louvers are too tight!

Check louver widths.
There should be some play between louvers and vertical jambs. Move the louvers side to side. If there are some louvers that appear to be tighter, measure a variety of louvers to ensure they are all the same width. If not, then it is a manufacturing error that requires the louvers to be replaced or cut down.

Check rail widths.
Measure all horizontals rails including any divider rails to ensure that all are exactly the same width.

Have rails been over tightened?
If there is less play near any rail and the louver widths have been checked for deficiencies, then there is a possibility the screws that attach the vertical jambs to the rails have been over tightened. To loosen the screws, remove a jamb cap and slide the light block out. This will expose the assembly holes. Use a # 8 Robertson drill bit to release the tightness.

Check for panel load.
Load is created when the installation of a panel is not plumb. If installed out of plumb, there is pressure put on the vertical jamb, which forces the door to open with a spring back effect. If the load is excessive, there will be a possibility that the louvers will be difficult to close. Adjusting the load can be resolved by one of the following ways:

1. If load is detected with no frame, shims will be required to plumb the panel installation. Start by focusing on the top and bottom hinge only. Remove all other hinge pins. Shim the top or the bottom hinge on the window jamb until the panel closes without springing back and the louvers operate without resistance. Then concentrate on shimming the remaining hinges while testing for spring back and louver operation.
2. If load is detected with frame applications, the adjustments are done by tightening or loosening the installation screws on the frame. Do not use shims. Start by removing all the installation screws except for the top. Re-install the bottom installation screw until there is no load. Continue with all other installation screws, one at a time, while checking for load.
3. If there is load on a Bi-fold panel, deal with the first hinge panel only, then attach the Bi-fold panel after the panel is installed properly.

Louvers are warped!

Check oversize specifications.
Factory will make products over its maximum size specifications with a void warranty authorization. If a single panel is over 36” wide, there is no warranty on warping or sagging.

Check tolerances.
Although a product is made within specifications, the process of fabrication can result in a slight variance of tolerances.

1. Through the fabrication process, the holes in the vertical jamb have a tolerance of 1/100 of an inch. While this may not seem to be much, it may cause slight variations in light penetration when the louvers are closed, as the louvers would overlap slightly in different locations.
2. The product is manufactured as a window covering that offers light control. While the product is extruded with reinforcement and additional louver support is provided at specified widths, the product will not overcome the natural effects of gravity and heat. Gravity will have a slight effect the wider the panel. Temperature change will naturally expand and contract Polyresin3®. The product should never have a variation on the level of more than 1/16”
3 While shutters are designed to be room darkening, they are not designed to be blackout.

Louvers need more tension!

Check for tension rods.
Tension rods are only used to provide tension when product is manufactured with tilt bars and rear tilt. Tension rods are used to provide stability in ensuring that the louvers stay open when positioned horizontally. A slight fluctuation in position is normal. To ensure that tension rods were initially installed at assembly, remove one of the jamb caps opposite the hinge and look inside to see if a three-sided piece of Polyresin3® is inserted into the vertical jamb.

- Proper tension can only be determined after panel has been fully assembled.
- Place vertical cap in position after tension has been adjusted.
- The tension on the louvers is decreased by inserting a shorter length of tension rod, and increased by inserting a longer length of tension rod.
- In a panel with a divider rail, tension adjustments must be done on both sides of the divider rail.

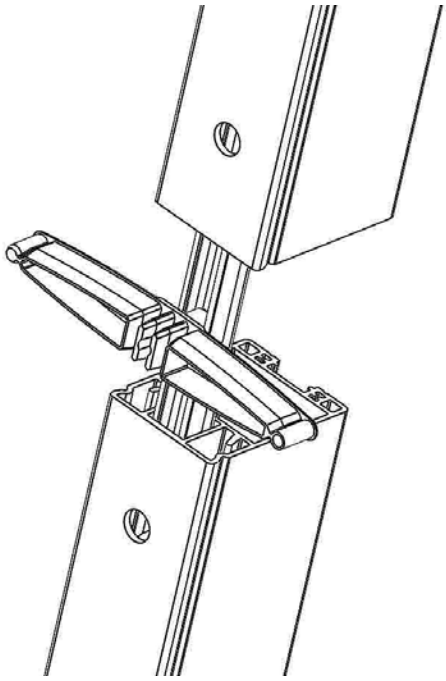

Number of Louver Caps with Tension	Number and Length of Tension Rod*		
	2 1/2” Louver	3 1/2” Louver	4 1/2” Louver
two to three louvers	(1) piece 5” long in the enter	(1) piece 7” long in the enter	(1) piece 9” long in the enter

Note: If panels are over 66” in height, add a divider rail and assume one height above and one height below divider rail. If louvers are loose, you can adjust the tension by adding a tension bar. Add it to the jamb opposite the hinges.

* Tension rod lengths are subject to change.

Panels are sagging!

Check oversize specifications.
Factory will make products over its maximum size specifications. When a product is manufactured oversize, the warranty is void regarding sagging of the product. The two specified overrides would be as follows:

Note: The maximum panel width is 36” wide. Anything over that width is void of sagging warranty.

Check divider rail requirements.
Factory will make products up to 66” high without the need of divider rail support. If the panel is over 66” high, one divider rail is required and if the panel is over 96” high a second divider rail is necessary. If two divider rails are Required, there cannot be over 66” between them. There cannot be 66” between any divider rail and head/bottom rail.

Check for jamb reinforcement.
Panel jambs are reinforced with either a 6” or 26” support. Panels over 20” wide require 6” supports and panel over 60” in length will require 26” supports. Check hinge side only. Lack of support requires repair.

Check the plumb of the installation.
If the vertical jambs are not plumb, the panels can appear to be sagging.

1. Measure the top width and the bottom width to see if there is any variation. If the variation is wider at the bottom, the distance has to be made the same as the top.
2. If the top and bottom widths are the same, check the diagonal. If uneven, an adjustment to the plumb is required to assist in leveling the panel.

Louvers are not working properly!

Check for panel load.
Load is created when the installation of a panel is not plumb. If installed out of plumb, there is pressure put on the vertical jamb, which forces the door to open with a spring back effect. If the load is excessive, there will also be a possibility of the louvers being difficult to close. This may cause the Clearview joiners to become damaged or breaking apart. Adjusting the load can be resolved by one of the following ways:

1. If load is detected with no frame, shims will be required to plumb the panel installation. Start by focusing on the top and bottom hinge only. Remove all other hinge pins. Shim the top or the bottom hinge on the window jamb until the panel closes without springing back and the louvers operate without resistance. Then concentrate on shimming any remaining hinges, while testing for spring back and louver operation.
2. If load is detected with frame applications, the adjustments are done by tightening or loosening the installation screws on the frame. Do not use shims. Start by removing all the installation screws except for the top. Re-install the bottom installation screw until there is no load. Continue with all other installation screws, one at a time, and checking for load.
3. If there is load on a Bi-fold panel, deal with the first hinged panel only, then attach the Bi-fold panel after the panel is installed properly.

Check connectors.
Connectors attach the louvers to a single operator.

1. Clearview joiners attach to the louvers at the back of the panel. Ensure that the joiners are securely attached and not bent. If the joiners easily separate, they could be defective, hence replace with new joiners.
2. If the louvers tilt properly, yet cannot close tight because it springs back open slightly, then the joiners are defective. To correct, simply remove one of the Clearview joiners.
3. Tilt bar connectors are attached to each louver and a tilt bar. If the tilt bar connector is detached from the louver, simply snap the connectors back into the louvers. Typical damage to tilt bar connectors is a result of opening the panels by the tilt bar.

Louvers are not working properly!

Replacing Damaged Tilt Bar Connectors

1. Remove tilt bar cap. It may be tight, so use a sharp object (e.g., screwdriver).
2. Slide tilt bar off connectors.
3. Remove broken connector(s).
4. Replace connector in slat groove by holding the louver and snapping the new connector into the T-shaped notch in the louver. Note: replace connectors with similar length piece.
5. Slide tilt bar over connectors and replace cap. (New cap may be required).

Note: It is possible to re-insert the tilt bar connectors without damage. Simply hold the louver, place the connector in the notch and press firmly. It is not necessary to remove the tilt bar.

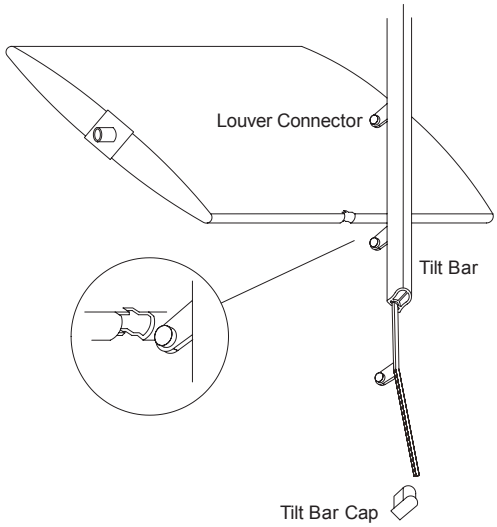

Repairing Old Clearview Connector

1. Remove broken joiners.
2. Snap joiner pin into louver.
3. Snap top and bottom of replacement joiner into joiner above and below the replacement joiner.
4. These joiners are made to stay together. If joiners do not come apart, then replace all joiners in that section.

Note: The top and bottom joiners in a panel are shorter. Replace these joiners with the same type joiners.

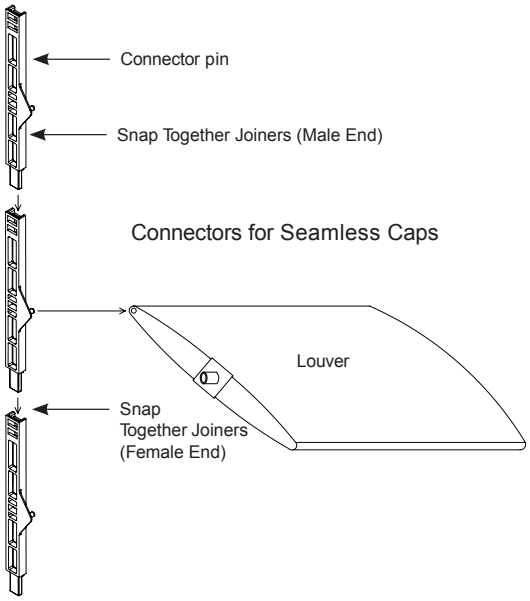

Louvers are not working properly!

Replacing New Tilt Bar Connectors

1. Remove tilt bar completely.
2. Using a pair of pliers, grab hold of the damaged connector.
3. Bend and/or twist the connector until it is removed from the tilt bar.
4. Set a new connector in the vacant hole.
5. Using the pliers, hold the connector as close to the base as possible.
6. Using a mallet, strike the pliers near the connector to fully seat it in the tilt bar.

Note: This process can be difficult, so please use caution to prevent damage and/or injury.

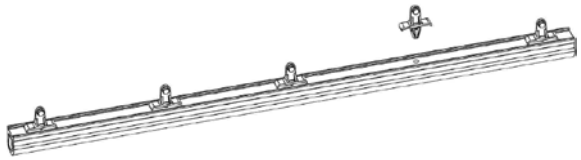

Repairing Rear Tilt (Clearview) Connectors

1. Remove broken Rear Tilt connector.
2. Snap a new connector into the louver.
3. Rotate the connector so the open “U” shape end is straddling the Rear Tilt (Clearview) bar.
4. Press on the connector and move the connector up or down until the snap feature aligns with the hole in the bar and firmly sets.
5. If the pin of a connector shears off, use a small pointed object (ie: pencil or new connector) to push the broken pin into the end cap. Replace with the new connector.

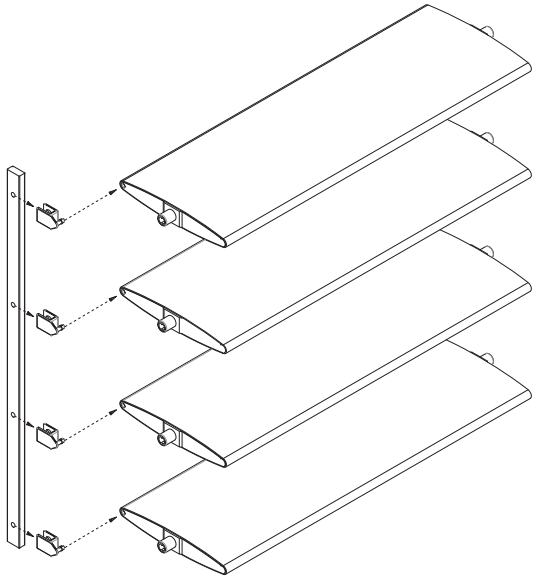

Clearing Obstructions from UltraClose system

1. Remove jamb cap from one end of the shutter panel.
2. Remove the light block or interlock from the vertical jamb/stile.
3. Remove the two assembly screws from the end of the panel in which the jamb cap was removed.
4. Loose the assembly screws at the opposite end of the panel.
5. Remove the louvers from the panel.
6. Slide the UltraClose assembly out of the vertical jamb/stile.
7. Examine the UltraClose assembly and determine if there are any visible defects or debris trapped in the system.
8. Remove any debris and re-assemble the panel.

Replacing Defective or Mistimed UltraClose Gearboxes

1. If there are defects in any of the UltraClose gearboxes or a mistimed louver(s), replace the gearboxes as necessary.
2. Identify the louver(s) that do not operate properly (make a pencil mark on the jamb or count the specific louver positions)
3. Remove jamb cap from one end of the shutter panel.
4. Remove the light block or interlock from the vertical jamb/stile.
5. Remove the two assembly screws from the end of the panel in which the jamb cap was removed.
6. Loose the assembly screws at the opposite end of the panel.
7. Remove the louvers from the panel.
8. Slide the UltraClose assembly out of the vertical jamb/stile.
9. To replace an UltraClose gearbox, hold the assembly firmly, then remove one of the vertical attaching bars.
10. Pull the defective or mistimed gearbox from the other vertical attaching bar.
11. Install new gearboxes.
12. Re-attach the vertical attaching bar, making sure the bar is firmly seated on each gearbox pin.
13. Re-assemble the shutter panel.

Louvers are discoloring!

Check for residue build-up.
The Polyresin3® material will not discolor and is warranted not to. Any situation of discoloration is a direct result of residue from a cleaner or natural build-up (smoke, dust or oil furnace). This product should be cleaned only with soap and water or a recommended vinyl cleaner. To prove discoloration is a result of build-up, an abrasive cleaner should be enough to take any build-up off the panel. If it is felt that the panels are discolored and warranted to be repaired or remade, the panels should be sent to our laboratory for analysis. Any costs related to the tests for non-warranty issues will be the responsibility of the consumer.

Static electricity is a stationary electronic charge; it invisibly builds up on many types of surfaces and can build up on any item made from PVC. Certain homes are more susceptible to static charges so under some circumstances a static charge in the home may attract dust, soot from candles or soot from kerosene lamps to any PVC surface causing it to appear to be dirty. If a Shutter appears to have attracted dirt or dust from the home this is not covered under warranty. The resulting film can simply be cleaned from the shutter using a manufacturing recommended cleaning product. Air fresheners located directly under shutters can create residue on the shutter.

Product is scratched!

Check for pull lines.
Pull lines are an inherent bi-product of the extrusion process. Polyresin3® pellets are softened to be able to be pulled through the extrusion machinery. It would be cost prohibitive to pull the Polyresin3® through the machinery at a slow enough rate that would eliminate pull lines. The pull lines are similar to wood grains in the fact that they follow the same direction of the process. They are not defective issues.

Check for shine lines.
Shine lines are another inherent bi-product of the extrusion process. While the softened Polyresin3® pellets are being pulled through the machinery, some of the pellets create a different sheen. These shine lines can run in any direction and are impossible to control. They are not defective issues.

Check for surface inconsistencies.
To determine if the apparent scratch is a line or scratch simply run your finger over the area. Touch will in most cases determine any imperfection.

Panels are not staying flush against the wall!

A panel or bi fold panel opened against a wall will creep into the room if the wall tilts into the room from the top of the window. This could also occur if the wall is plumb yet the bi fold panels are larger. Factory hinges are designed for ease of panel removal. The play in the hinge barrel can magnify the situation.

To resolve the issue for an Inside mount with no frame, use one or all suggestions below:
1) Move the bottom of the panel into the room slightly. An alternative hinge is recommended. Either use an extended hinge if a regular hinge was originally used or use a regular hinge if an extended hinge
2) Slightly bend the hinge pin to create a friction inside the hinge barrel
3) On a bifold, Velcro can be used between the bifolding panels

To resolve the issue for an Inside mount with frame, use one or all suggestions below:
1) Move the bottom of the frame into the room slightly.
2) Slightly bend the hinge pin to create a friction inside the hinge barrel
3) On a bifold, Velcro can be used between the bifolding panels